Haier

# ATW Service Manual

SYJS-03-2019REV.A

Edition: 2019-03

Haier

## CONTENTS


1. Outdoor Units Lineup.....1
2. Nomenclature .....2
3. Feature .....3
4. Description Of Main Components.....4
5. Specifications .....6
6. Dimensions .....9
7. Piping Diagram.....11
8. Wiring Diagram .....14
9. Electric Characteristics.....16
10. Capacity Tables .....17
11. Operation Limits Delivery-Leaving.....23
12. Water Pressure Drop.....25
13. Sound Level.....27
14. Installation .....28
15. PCB Photo.....55
16. Dip Switch Setting .....56
17. Digital Tube Display.....57
18. Startup & Running & Maintenance .....59
19. YR-E27(Optional wired controller).....62
20. Error Code.....73
21. Troubleshooting.....74
22. APPENDIX Sensor Resistance Table .....101

## 1. Outdoor Units Lineup

| Model | Power Supply (V/Ph/Hz) | Capacity | Compressor type | Heat exchanger | A/C mode | Hydraulic module | Refrigerant |
|---|---|---|---|---|---|---|---|
| AU082FYCRA(HW) | 220-240/1 /50/60 | 8kW | DC Inverter | Coaxial | Heat pump | Built-in | R32 |

| Model | Power Supply (V/Ph/Hz) | Capacity | Compressor type | Heat exchanger | A/C mode | Hydraulic module | Refrigerant |
|---|---|---|---|---|---|---|---|
| AU112FYCRA(HW) | 220-240/1/50/60 | 11kW | DC Inverter | Tubes in shell | Heat pump | Built-in | R32 |
| AU162FYCRA(HW) | 220-240/1/50/60 | 16kW | DC Inverter | | Heat pump | Built-in | R32 |

## 2. Nomenclature

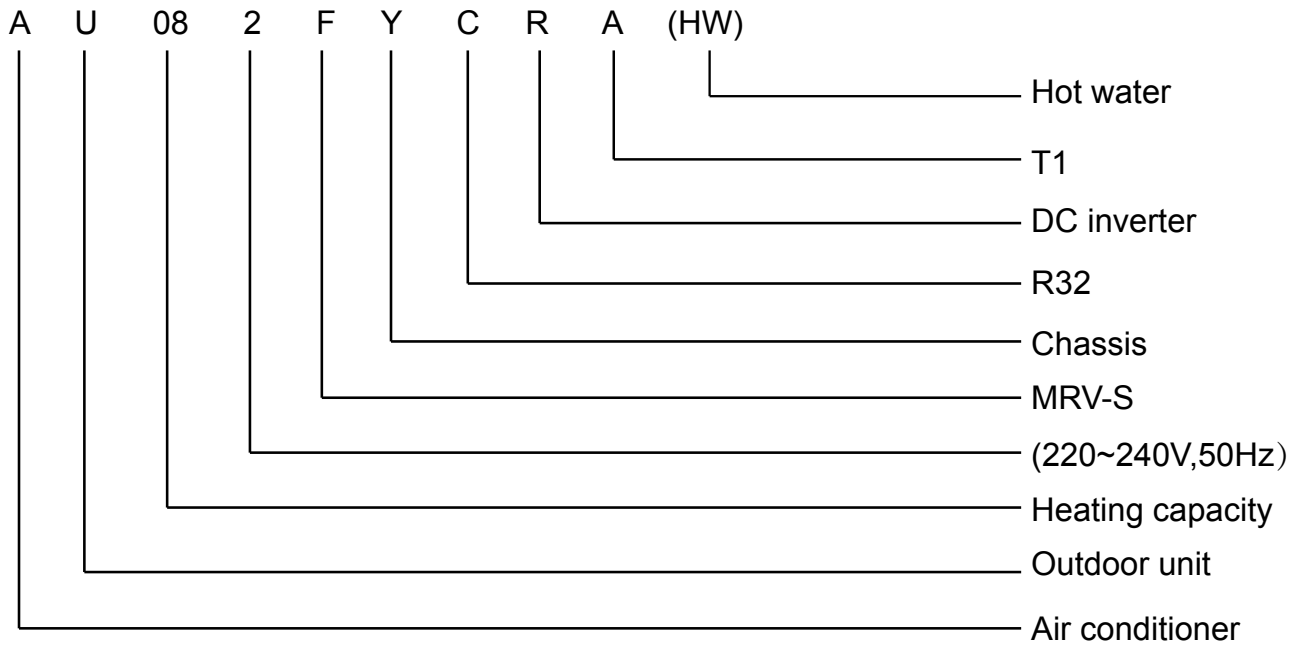

# 3. Feature

## 3.1 Monobloc Air-to-Water Heat pump System

Full DC inverter mini Heat pump adopts highly intelligent inverter-driven compressor. This advanced technology enables the output of the outdoor unit to be modulated by the real heat load demands..
This advanced system ensures precise temperature regulation and highly efficient energy usage, making a significant contribution to limiting the impact on the environment.

## 3.2 High performance heat exchanger

Hydrophilic film fins and inner-threaded copper pipes optimize heat exchange efficiency.

## 3.3 Low-operating sound design

Optimally design fan shape and new designed discharge air grille and air deflector, making higher air volume and lower operation sound.

## 3.4 Wide operation temperature range

Stable and safe running in wide ambient temperature range, cooling performance from 10 ˚C to 46˚C, heating from -20˚C to 35˚C.

## 3.5 Energy saving and high reliability

By adopting high efficiency Coaxial heat exchanger or tubes in shell heater exchanger, the energy consumption can be reduced.

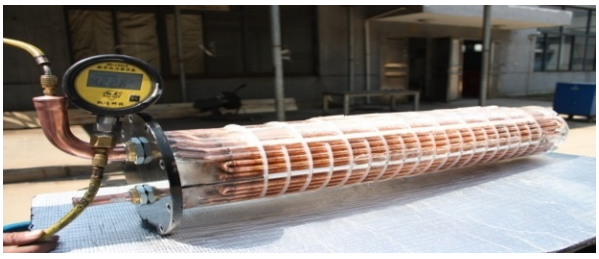

Built-in with voltage protection, current protection, anti-freezing protection, water flow protection and etc., effectively guarantee the system to work safely.

## 3.6 Flexible and convenient control

Compact devices with advanced function and friendly user interface.
The Heat pump can be controlled by optional  wired controller (YR-E27) ,

## 3.7 Integrated and compact design

Fully integrated and built-in hydraulic module, such as Coaxial heat exchanger or tubes in shell heater exchanger, water circulating pump, the water pressure difference switch, etc. It saves installation space and cost.

## 3.8 EXV control flow more precisely

Stable and accurate gas flow control. EXV achieves 500 pulses to adjust flow precisely. Ensure the temperature-control precisely and steadily to provide a comfortable environment.
Fast respond resulting in higher efficiency and improved reliability.

## 3.9 Water pump starts/stops compulsory function

Press  the key “Set” of YR-E27  for 15 seconds to start the water pump operating when the unit is standby. Press “Set” key for 15 seconds again to stop the water pump.

## 4. Description Of Main Components

**Structure**
Panels and base are made from galvanized steel plate painted with epoxy power to ensure total resistance to atmospheric pollution, condensate collection pan as standard.
**Air cooled coils:**
The coils are made from high performance and seamless copper tuber and high surface area aluminum fins to ensure optimum heat exchange capability. Condenser coil protection grill is standard.
**Fan motor:**
To achieve high efficiency heat exchange, the unit is equipment with the high performance axial-flow fans. The fan is driven directly by weather proof motor to ensure reliable operation, the fan motor is six-pole electric motor with built-in thermal cut-out.
**Hydraulic module:**
It is fully integrated and equipped with key hydraulic components such as Coaxial heat exchanger (applied for AU082) and tubes in shell heater exchanger (applied for AU112/162). water circulating pump.The water pressure difference switch is provided in the units to protect against damage to the water pump.
**Power and control electrical panel**
Power and control electrical panel constructed in accordance with IEC 204-1/EN60335-2-40, complete with compressor contactor,control via control panel.

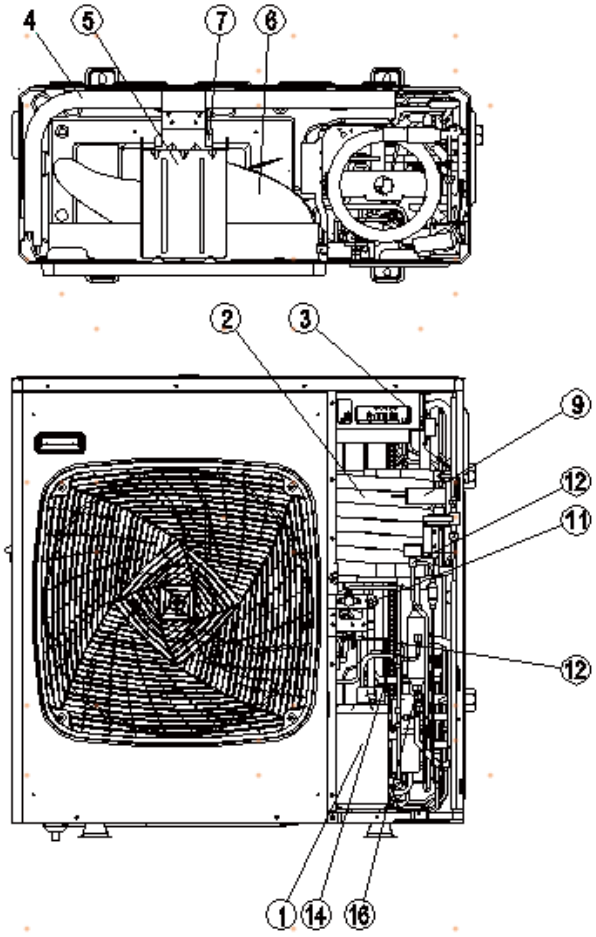


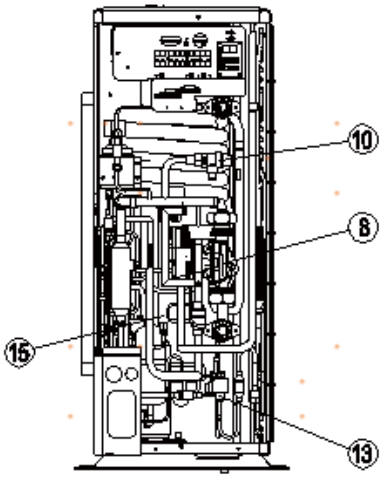


AU082FYCRA (HW)

1.Compressor
2.Coaxial heat exchanger
3.Electrical panel
4.Condenser
5.Motor bracket
6.Axial-flow fan
7.Motor
8.Water Pump
9.Pressure Difference switch
10.Safety valve
11.4-ways valve
12.Solenoid valve
13.Electronic expansion valve
14.High pressure switch
15.Low pressure sensor
16.High pressure sensor

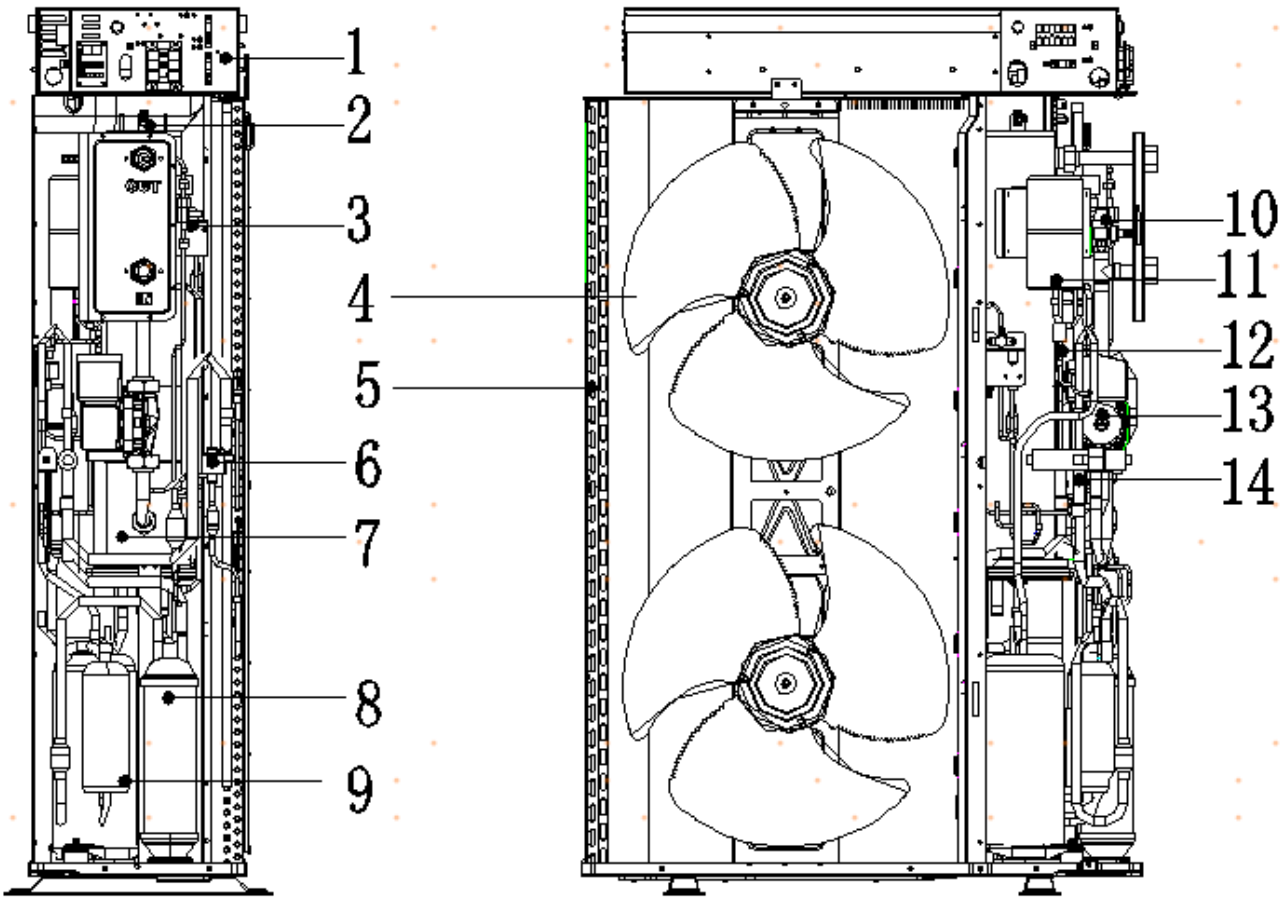


AU112/162 FYCRA (HW)

1.Electrical panel
2.Discharge valve
3.Differential pressure switch
4.Axial-flow fan
5.Condenser
6.Electronic expansion valve
7.Shell-and-tube heat exchanger
8.Accumulator
9.Compressor
10.Safety valve
11.Buffer tank
12.High pressure switch
13.Pump
14.4-Ways valve

## 5. Specifications

| Model | | | AU082FYCRA(HW) |
|---|---|---|---|
| Power supply | | V-Ph-Hz | 1PH, 220-240V~,50/60Hz |
| Cooling*(1) | Capacity | kW | 5.50 |
| | Input | kW | 2.34 |
| Cooling*(2) | Capacity | kW | 7.00 |
| | Input | kW | 2.06 |
| Heating*(3) | Capacity | kW | 7.50 |
| | Input | kW | 2.34 |
| Heating*(4) | Capacity | kW | 7.80 |
| | Input | kW | 1.77 |
| EER*(1) | | kW/kW | 2.35 |
| EER*(2) | | kW/kW | 3.40 |
| Max.input consumption | | kW | 4.90 |
| Max.input current | | A | 21.3 |
| Compressor | Model | | SVB200FKMMC |
| | Type | | ROTARY |
| | Brand | | Mitsubishi Electric |
| | Capacity | kW | 6.45 |
| | Input | kW | 2.15 |
| | Rated load current | A | 7.90 |
| | Locked rotor Amp | A | 24 |
| | Thermal protector | | Inner |
| | Refrigerant oil type | | FW68S |
| | Refrigerant oil charge | ml | 400 |
| Outdoor fan motor | Model | | SIC-88FWJ-F1180-1 |
| | Type | | DC Motor |
| | Brand | | NIDEC SHIBAURA |
| | Input | kW | 180 |
| | Speed | r/min | 160-850 |
| Water pump | Type | | Para 25/8-75/SC-WILO |
| | Input (H/M/L) | W | 75/57/35 |
| | Pumping head | m | 8 |
| Outdoor air flow | | $m^3/h$ | 4200 |
| Throttle | | | EXV |
| Outdoor noise level (sound power)*(3) | | dB(A) | 60.9 |
| Flow rate of water | | $m^3/h$ | 1.38 |
| The water pressure drop of heat-exchanger | | kPa | 45 |
| The Max. and Min. water inlet pressure | | kPa | 500/150 |
| Outdoor unit | Net dimension (W×H×D) | mm | 950×965×395 |
| | Packing dimension(W×H×D) | mm | 1010×990×458 |
| | Net/ Gross weight | kg | 87/90 |
| Refrigerant | Type | | R32 |
| | Charged volume | kg | 1.15 |
| Connection wiring | Power wire | mm2 | 3×10.0 |
| Pipe diameter | Water inlet/outlet | inch | 1-1/4" |
| Controller (optional) | | | Wired controller |
| Ambient temperature range | | | Cooling:10~46; Heating: -20~35<br>(Antifreeze must be added below 5) |
| Leaving water temperature range | | | Cooling: 5~20; Heating: 20~55 |

Note: Specifications are based on the following conditions:
1. Cooling: (*1) Entering/leaving water temperature: 12/7°C,outdoor ambient temperature 35°C DB.
(*2) Entering/leaving water temperature: 23/18°C,outdoor ambient temperature 35°C DB.
2.Heating: (*3) Entering/leaving water temperature: 40/45°C,outdoor ambient temperature 7°C DB/6°C WB .
(*4) Entering/leaving water temperature: 30/35°C,outdoor ambient temperature 7°C DB/6°C WB .
3. It is tested in a semi-anechoic room (sound power).
4. The above data may be changed without notice for future improvement on quality and performance.

| Model | | | AU112FYCRA(HW) |
|---|---|---|---|
| Power supply | | V-Ph-Hz | 1PH, 220-240V~,50/60Hz |
| Cooling*(1) | Capacity | kW | 11.50 |
| | Input | kW | 3.83 |
| Cooling*(2) | Capacity | kW | 13.50 |
| | Input | kW | 2.94 |
| Heating*(3) | Capacity | kW | 10.5 |
| | Input | kW | 3.37 |
| Heating*(4) | Capacity | kW | 11.00 |
| | Input | kW | 2.61 |
| EER*(1) | | kW/kW | 3.00 |
| EER*(2) | | kW/kW | 4.60 |
| Max.input consumption | | kW | 5.60 |
| Max.input current | | A | 24.3 |
| Compressor | Model | | TVB306FKMMC |
| | Type | | ROTARY |
| | Brand | | Mitsubishi Electric |
| | Capacity | kW | 10.27 |
| | Input | kW | 3.42 |
| | Rated load current | A | 9.87 |
| | Locked rotor Amp | A | 45.5 |
| | Thermal protector | | Inner |
| | Refrigerant oil type | | FW68S |
| | Refrigerant oil charge | ml | 870 |
| Outdoor fan motor | Model | | SIC-88FWJ-F1180-1 |
| | Type | | DC Motor |
| | Brand | | NIDEC SHIBAURA |
| | Input | kW | 180 |
| | Speed | r/min | 160-780 |
| Water pump | Type | | UPMXL GEO 25-125 130 PWM-Grundfos |
| | Input (H/M/L) | W | 160/110/80 |
| | Pumping head | m | 12.5 |
| Outdoor air flow | | $m^3/h$ | 7200 |
| Throttle | | | EXV |
| Outdoor noise level (sound power)*(3) | | dB(A) | 62.7 |
| Flow rate of water | | $m^3/h$ | 1.89 |
| The water pressure drop of heat-exchanger | | kPa | 40 |
| The Max. and Min. water inlet pressure | | kPa | 500/150 |
| Outdoor unit | Net dimension (W×H×D) | mm | 950×1490×380 |
| | Packing dimension(W×H×D) | mm | 1010×1520×458 |
| | Net/ Gross weight | kg | 139/142 |
| Refrigerant | Type | | R32 |
| | Charged volume | kg | 2.40 |
| Connection wiring | Power wire | mm2 | 3×10.0 |
| Pipe diameter | Water inlet/outlet | inch | 1-1/4" |
| Controller (optional) | | | Wired controller |
| Ambient temperature range | | | Cooling:10~46; Heating: -20~35(Antifreeze must be added below 5) |
| Leaving water temperature range | | | Cooling: 5~20; Heating: 20~55 |

Note: Specifications are based on the following conditions:
1. Cooling: (*1) Entering/leaving water temperature: 12/7°C,outdoor ambient temperature 35°C DB.
(*2) Entering/leaving water temperature: 23/18°C,outdoor ambient temperature 35°C DB.
2.Heating: (*3) Entering/leaving water temperature: 40/45°C,outdoor ambient temperature 7°C DB/6°C WB .
(*4) Entering/leaving water temperature: 30/35°C,outdoor ambient temperature 7°C DB/6°C WB .
3. It is tested in a semi-anechoic room (sound power).
4. The above data may be changed without notice for future improvement on quality and performance.

| Model | | | AU162FYCRA(HW) |
|---|---|---|---|
| Power supply | | V-Ph-Hz | 1PH, 220-240V~,50/60Hz |
| Cooling*(1) | Capacity | kW | 14.50 |
| | Input | kW | 4.92 |
| Cooling*(2) | Capacity | kW | 16.00 |
| | Input | kW | 3.64 |
| Heating*(3) | Capacity | kW | 15.00 |
| | Input | kW | 4.62 |
| Heating*(4) | Capacity | kW | 16.00 |
| | Input | kW | 3.86 |
| EER*(1) | | kW/kW | 2.95 |
| EER*(2) | | kW/kW | 4.40 |
| Max.input consumption | | kW | 7.30 |
| Max.input current | | A | 31.7 |
| Compressor | Model | | MVB40FKMMC |
| | Type | | ROTARY |
| | Brand | | Mitsubishi Electric |
| | Capacity | kW | 13.68 |
| | Input | kW | 4.34 |
| | Rated load current | A | 14.60 |
| | Locked rotor Amp | A | 37.8 |
| | Thermal protector | | Inner |
| | Refrigerant oil type | | FW68S |
| | Refrigerant oil charge | ml | 1250 |
| Outdoor fan motor | Model | | SIC-88FWJ-F1180-1 |
| | Type | | DC Motor |
| | Brand | | NIDEC SHIBAURA |
| | Input | kW | 180 |
| | Speed | r/min | 160-780 |
| Water pump | Type | | UPMXL GEO 25-125 130 PWM-Grundfos |
| | Input (H/M/L) | W | 180/130/90 |
| | Pumping head | m | 12.5 |
| Outdoor air flow | | $m^3/h$ | 7200 |
| Throttle | | | EXV |
| Outdoor noise level (sound power)*(3) | | dB(A) | 67.4 |
| Flow rate of water | | $m^3/h$ | 2.75 |
| The water pressure drop of heat-exchanger | | kPa | 40 |
| The Max. and Min. water inlet pressure | | kPa | 500/150 |
| Outdoor unit | Net dimension (W×H×D) | mm | 950×1490×380 |
| | Packing dimension(W×H×D) | mm | 1010×1520×458 |
| | Net/ Gross weight | kg | 139/142 |
| Refrigerant | Type | | R32 |
| | Charged volume | kg | 2.60 |
| Connection wiring | Power wire | mm2 | 3×10.0 |
| Pipe diameter | Water inlet/outlet | inch | 1-1/4" |
| Controller (optional) | | | Wired controller |
| Ambient temperature range | | | Cooling:10~46; Heating: -20~35(Antifreeze must be added below 5) |
| Leaving water temperature range | | | Cooling: 5~20; Heating: 20~55 |

Note: Specifications are based on the following conditions:
1. Cooling: (*1) Entering/leaving water temperature: 12/7°C,outdoor ambient temperature 35°C DB.
(*2) Entering/leaving water temperature: 23/18°C,outdoor ambient temperature 35°C DB.
2.Heating: (*3) Entering/leaving water temperature: 40/45°C,outdoor ambient temperature 7°C DB/6°C WB .
(*4) Entering/leaving water temperature: 30/35°C,outdoor ambient temperature 7°C DB/6°C WB .
3. It is tested in a semi-anechoic room (sound power).
4. The above data may be changed without notice for future improvement on quality and performance.

## 6. Dimensions

AU082FYCRA(HW) (Unit: mm)

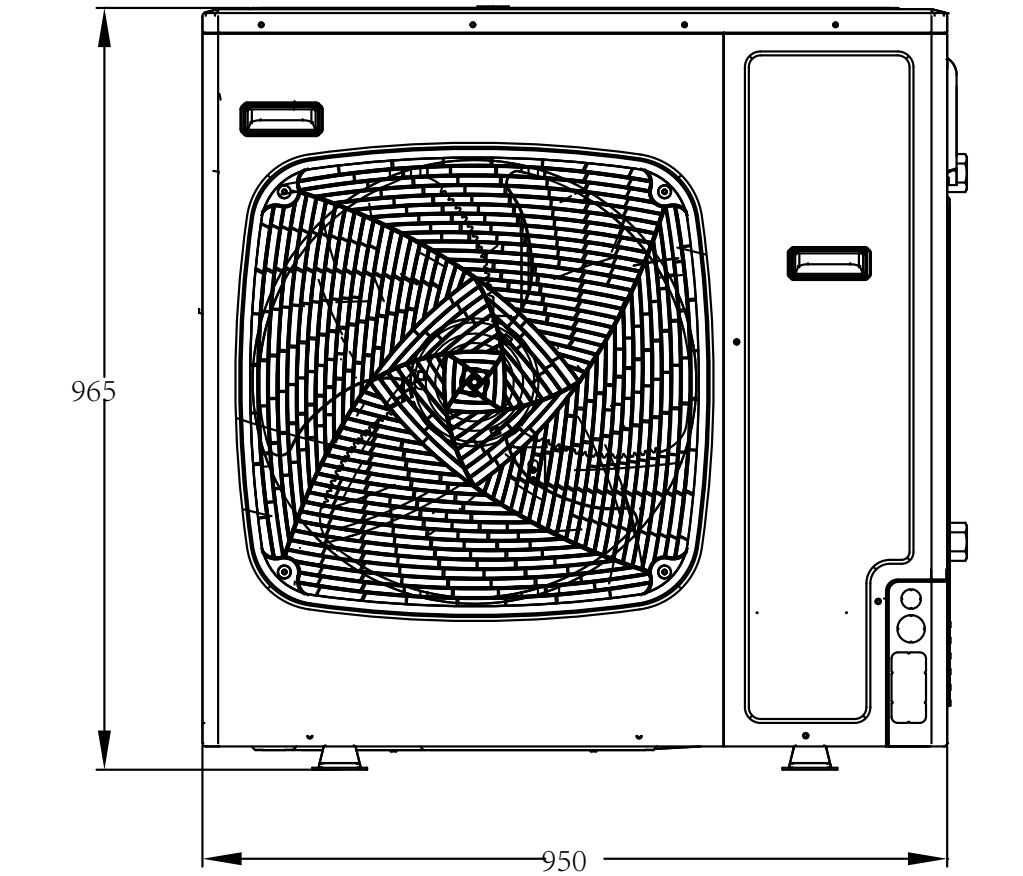


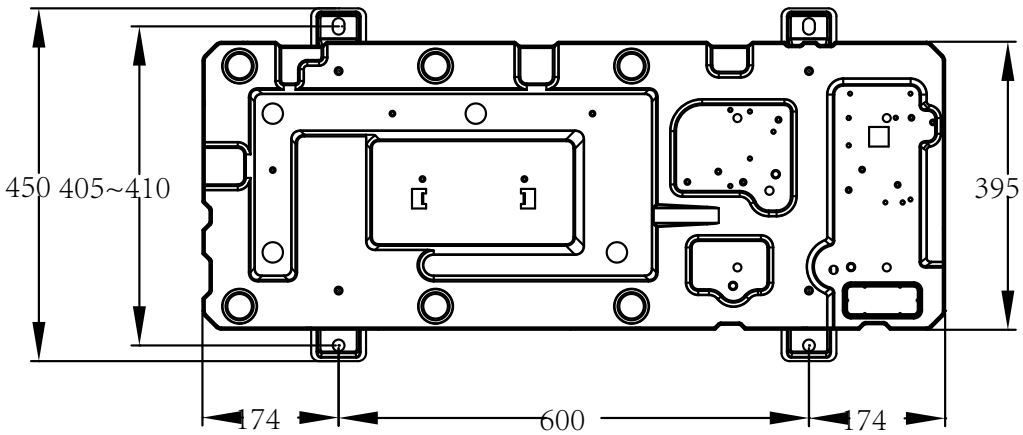

AU112/162FYCRA(HW) (Unit: mm)

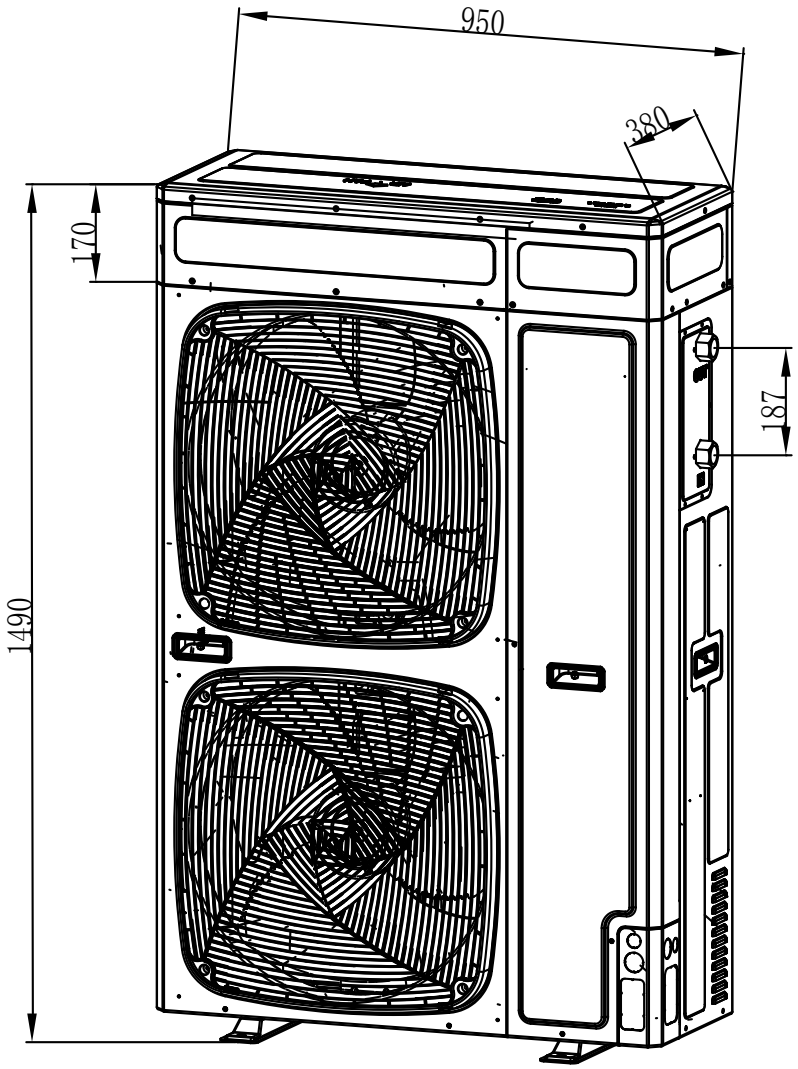


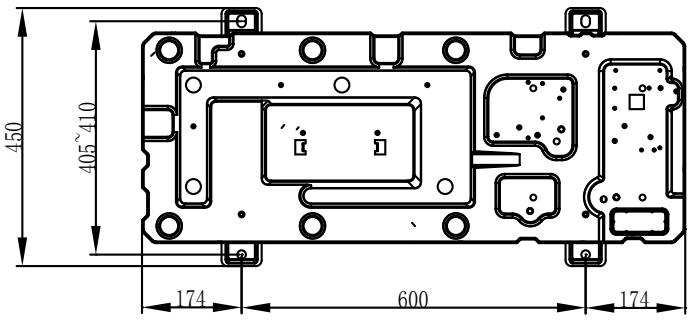

# 7. Piping Diagram

**AU082FYCRA(HW)**

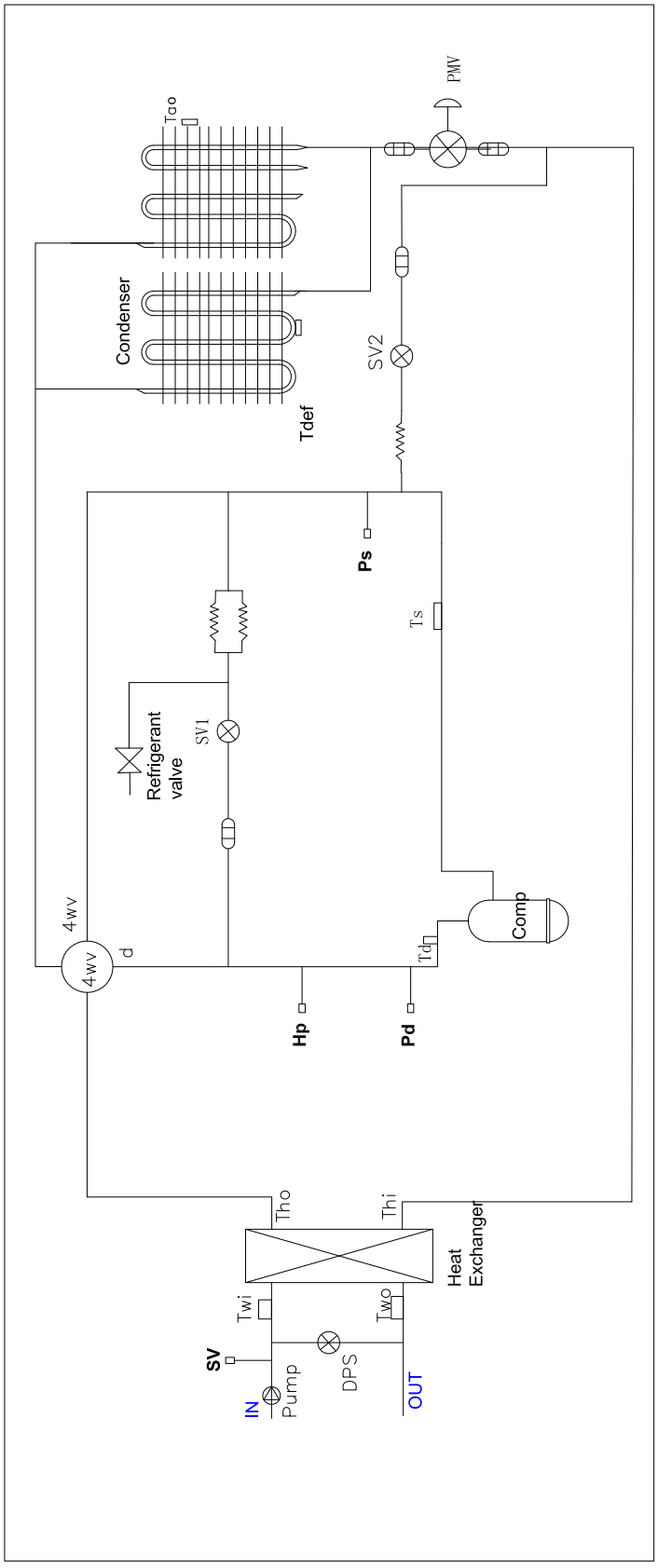

**AU112/162FYCRA(HW)**

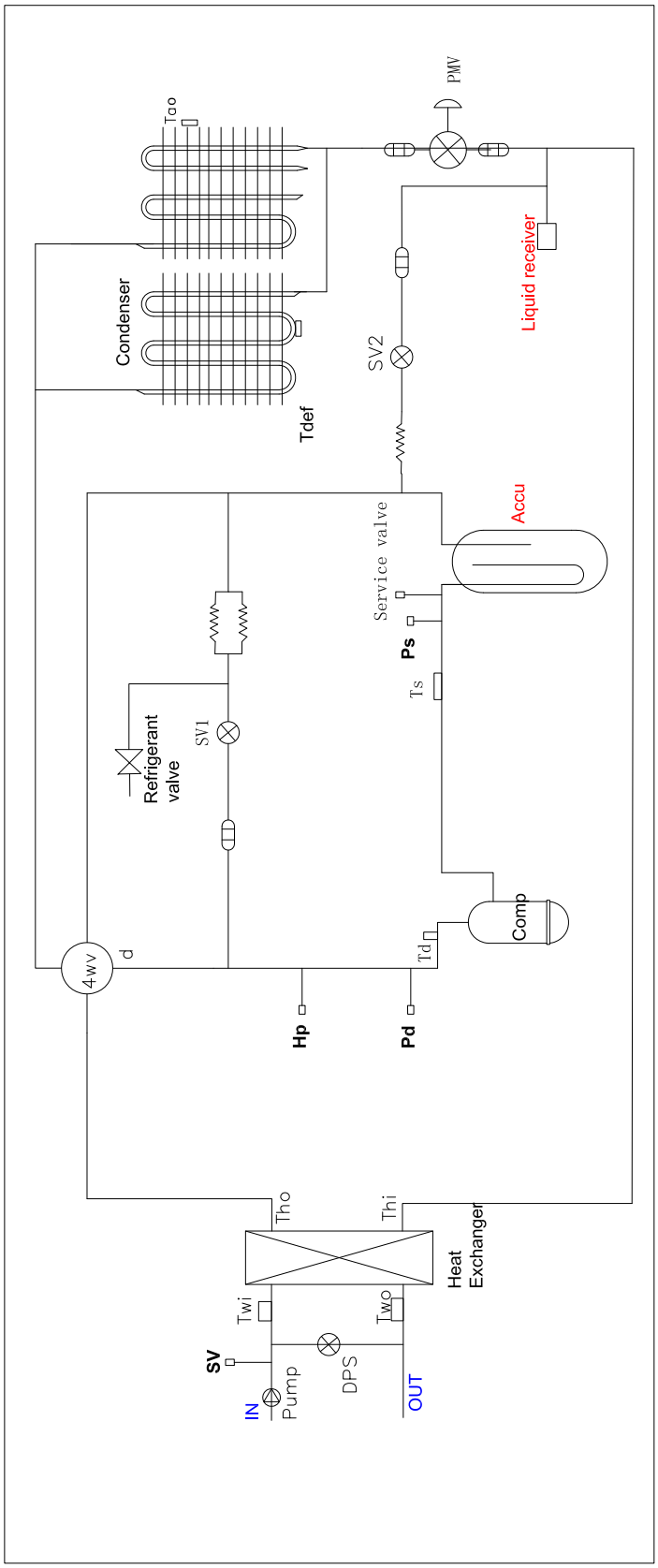

| Part name | Model | Sign | Function | Date |
|---|---|---|---|---|
| Compressor | SVB200FKMMC AU082FYCRA(HW) | Comp | Capacity control, meet indoor load request by adjusting the frequency | Motor resistance (at 20°C): 1.94Ω |
| | TVB306FKMMC AU112FYCRA(HW) | | | Motor resistance (at 20°C): 1.53Ω |
| | MVB40FKMMC AU162FYCRA(HW) | | | Motor resistance (at 20°C): 0.72Ω |
| Pressure sensor | ALL | Pd | High pressure detection | Pressure range:0 to 4.15MPa |
| | | Ps | Low pressure detection | Pressure range:0 to 1.7MPa |
| Pressure switch | ALL | Hp | High pressure protection | 4.15MPa, OFF |
| Electronic expansion valve | AU082FYCRA(HW) | PMV | In heating, refrigerant flow control | ¢ 1.8 |
| | AU112/162FYCRA(HW) | | | ¢ 2.5 |
| 4-way valve | ALL | 4WV | Change over between cooling and heating | AC220V, electrified in heat; not electrified in cooling or defrosting |
| Solenoid valve | ALL | SV1 | Keep balance of high/low pressure when compressor starts up or stops | AC220V |
| | | SV2 | Refrigerant jet protection when discharging temp. is too high | |
| Liquid receiver | AU112/162FYCRA(HW) | / | Used to storage the refrigerant | Volume:1.1L |
| Gas-liquid separator | AU112/162FYCRA(HW) | ACCU | Used to separate the gas and liquid | ¢ 90*350 |
| Refrigerant valve | ALL | / | Used to charge the refrigerant to unit | ¢ 7 |
| Service valve | AU112/162FYCRA(HW) | / | Used to detect the pressure | HPb59-1 S12.5 |
| Flow switch | AU082FYCRA(HW) | DPS | Detect Flow rate | 0.012MPa OFF 0.009MPa ON |
| | AU112/162FYCRA(HW) | | | 0.008MPa, OFF 0.0055MPa ON |
| Pump | AU082FYCRA(HW) | Pump | Transport liquid | Pumping head:8m |
| | AU112/162FYCRA(HW) | | | Pumping head:12.5m |
| Heat exchanger | AU082FYCRA(HW) | / | Used to exchange the heat from refrigerant to water | Design pressure: water side:1.5MPa; Refrigerant side:4.2MPa |
| | AU112/162FYCRA(HW) | / | | Design pressure: shell side:1.0MPa;Tube pass:4.2MPa |
| Safety valve | ALL | SV | Reduce system pressure | Operation pressure:0.55MPa |
| Temp. sensor | ALL | Tdef | Check frost condition of outdoor heat exchanger | R(25°C)=10KB (25/50°C)=3700K |
| | | Ts | suction temp. of compressor | |
| | | Tao | Detect ambient temp. set primary setting for fan speed target pressure and PMV open angle | |
| | | Thi | Detect the in refrigerant temp. of heat exchanger | |
| | | Tho | Detect the out refrigerant temp. of heat exchanger | |
| | | Twi | Detect the in water temp. of | |
| | | | heat exchanger | |
| | | Two | Detect the out water temp. of | |
| | | | heat exchanger | |
| | | Td | Detect the discharging temp. of compressor | R (80°C)=50KB (25/80°C)=4450K |

# 8. Wiring Diagram

## AU082FYCRA(HW)

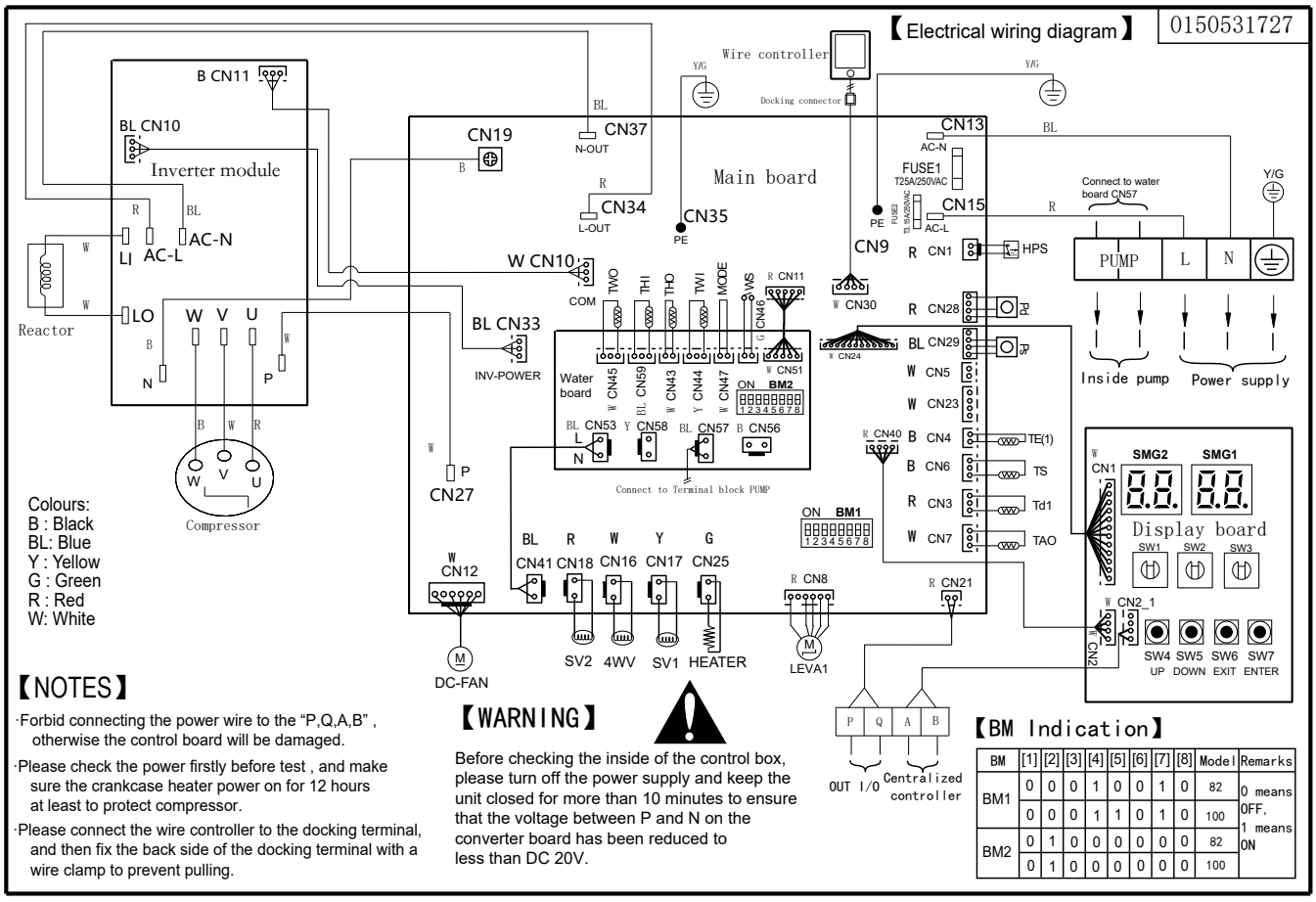

**AU112/162FYCRA(HW)**

【Electrical wiring diagram】

0150531728

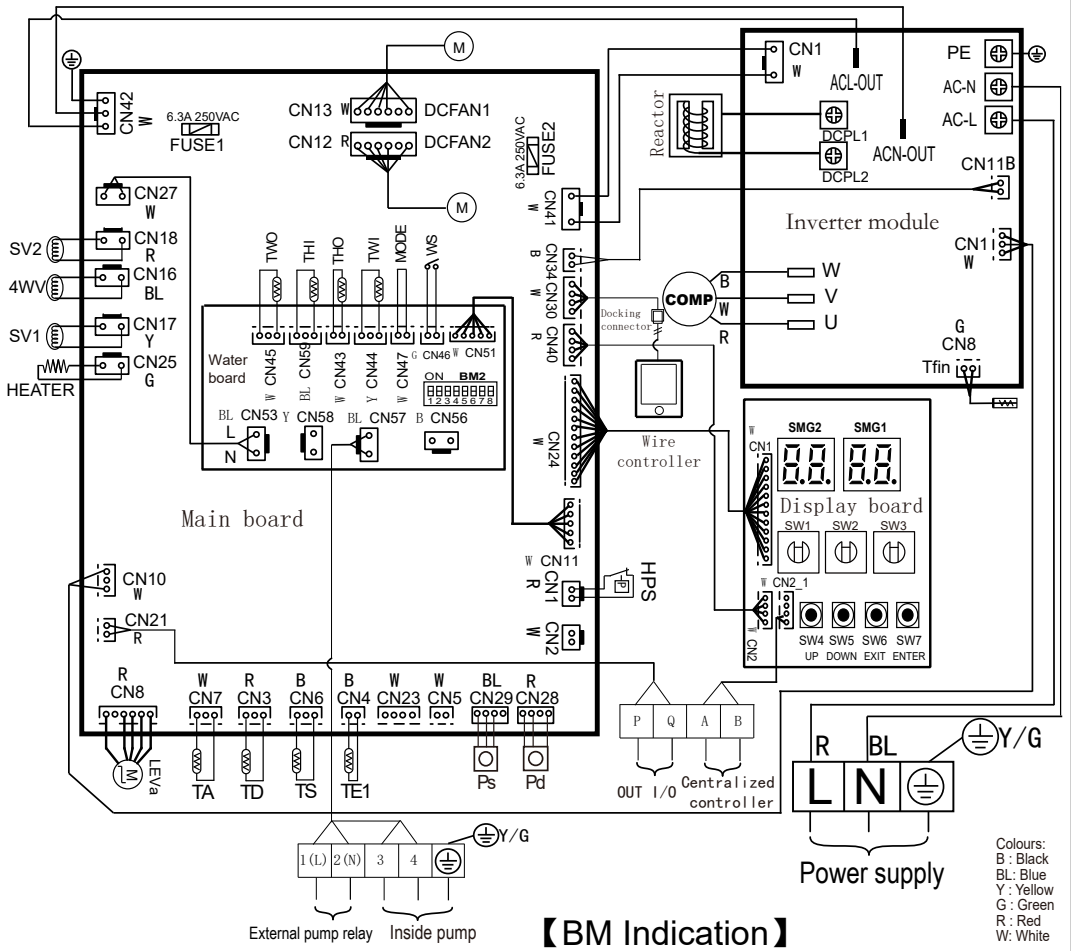


## 【BM Indication】

| BM | [1] | [2] | [3] | [4] | [5] | [6] | [7] | [8] | Model | Remarks |
|---|---|---|---|---|---|---|---|---|---|---|
| BM1 | 0 | 0 | 1 | 0 | 0 | 0 | 1 | 0 | 112 | 0 means OFF, 1 means ON |
| | 0 | 0 | 1 | 0 | 1 | 0 | 1 | 0 | 162 | |
| BM2 | 0 | 1 | 0 | 0 | 0 | 0 | 0 | 0 | 112 | |
| | 0 | 1 | 0 | 0 | 0 | 0 | 0 | 0 | 162 | |

## 【WARNING】

Before checking the inside of the control box, please turn off the power supply and keep the unit closed for more than 10 minutes to ensure that the voltage between P and N on the converter board has been reduced to less than DC 20V.

## 【NOTES】

·Forbid connecting the power wire to the “P,Q,A,B” , otherwise the control board will be damaged.

·Please check the power firstly before test , and make sure the crankcase heater power on for 12 hours at least to protect compressor.

·Please connect the wire controller to the docking terminal, and then fix the back side of the docking terminal with a wire clamp to prevent pulling.

| Symbol | Signification |
|---|---|
| ACL | Live Wire |
| ACN | Neutral Wire |
| HEATER | Heater |
| SV1 | unloading valve |
| SV2 | spray valve |
| 4WV | 4 way valve |
| AB | Monitor |
| DCFAN1 | up fan |
| DCFAN2 | down fan |
| LED1-4 | lights |

| Symbol | Signification |
|---|---|
| HPS | high pressure switch |
| LPS | low pressure switch |
| TD | compressor discharge sensor |
| TE(1) | defrost temp sensor |
| Tfin | IPM temperature sensor |
| TS | compressor suction sensor |
| TA | ambient temp sensor |
| EEV | electronic expansion valve |
| LD1-3 | digital display tubes |
| SW01,02 | thumbwheels |

## 9. Electric Characteristics

| Model | Outdoor Unit | | | | | Power Supply | | Compressor | OFM | |
|---|---|---|---|---|---|---|---|---|---|---|
| | Hz | Voltage | Phase | Min. | Max. | MCA | MFA | MSC | kW | FLA |
| AU082FYCRA(HW) | 50Hz | 220~240V | 1Ph | 198V | 264V | 21.3 | 32 | 4.2 | 0.18 | 0.8 |
| AU112FYCRA(HW) | 50Hz | 220~240V | 1Ph | 198V | 264V | 24.3 | 32 | 8.5 | 0.18+0.18 | 0.8+0.8 |
| AU162FYCRA(HW) | 50Hz | 220~240V | 1Ph | 198V | 264V | 31.7 | 40 | 14 | 0.18+0.18 | 0.8+0.8 |

Remark:
MCA: Min. Current Amps. (A)
MFA: Max. Fuse Amps. (A)
MSC: Max. Starting Amps. (A)
OFM: Outdoor Fan Motor
FLA: Full Load Amps. (A)
kW: Rated Motor Output (kW)

# 10. Capacity Tables

## 10.1 Cooling capacity

| AU082FYCRA(HW) | | | | | | |
|---|---|---|---|---|---|---|
| Air temp. | Capacity(kW) Nom. | Capacity(kW) Min. | Capacity(kW) Max. | EER(EN14511) Nom. | EER(EN14511) Min. | EER(EN14511) Max. |
| DB | Water flow temperature 20℃ | | | | | |
| 45 | 6.75 | 2.03 | 7.43 | 3.95 | 4.05 | 3.81 |
| 35 | 7.86 | 2.36 | 8.65 | 3.42 | 5.70 | 3.47 |
| 25 | 8.69 | 2.61 | 9.56 | 5.13 | 8.24 | 4.90 |
| 15 | 9.60 | 2.88 | 10.56 | 7.53 | 10.75 | 7.19 |
| 10 | 10.17 | 3.05 | 11.19 | 9.36 | 11.45 | 9.47 |
| DB | Water flow temperature 18℃ | | | | | |
| 45 | 5.95 | 1.79 | 6.55 | 3.93 | 4.02 | 3.79 |
| 35 | 7.00 | 2.10 | 7.70 | 3.40 | 5.66 | 3.45 |
| 25 | 8.24 | 2.47 | 9.06 | 5.10 | 8.18 | 4.87 |
| 15 | 9.11 | 2.73 | 10.03 | 7.47 | 10.68 | 7.14 |
| 10 | 9.33 | 2.80 | 10.27 | 9.85 | 10.98 | 9.41 |
| DB | Water flow temperature 15℃ | | | | | |
| 45 | 5.92 | 1.66 | 6.46 | 2.21 | 3.09 | 2.15 |
| 35 | 6.73 | 1.89 | 7.34 | 2.95 | 4.19 | 2.92 |
| 25 | 7.66 | 2.15 | 8.35 | 4.30 | 6.03 | 4.12 |
| 15 | 8.48 | 2.37 | 9.24 | 6.28 | 8.39 | 6.01 |
| 10 | 8.71 | 2.44 | 9.50 | 8.49 | 10.20 | 8.08 |
| DB | Water flow temperature 10℃ | | | | | |
| 45 | 5.16 | 1.44 | 5.67 | 1.97 | 2.69 | 1.91 |
| 35 | 6.06 | 1.70 | 6.67 | 2.63 | 3.64 | 2.60 |
| 25 | 6.67 | 1.87 | 7.34 | 3.82 | 5.25 | 3.66 |
| 15 | 7.34 | 2.05 | 8.07 | 5.59 | 7.30 | 5.35 |
| 10 | 7.71 | 2.16 | 8.48 | 7.55 | 8.88 | 7.19 |
| DB | Water flow temperature 7℃ | | | | | |
| 45 | 4.24 | 1.27 | 4.66 | 1.95 | 2.49 | 1.78 |
| 35 | 5.50 | 1.65 | 6.05 | 2.35 | 3.47 | 2.47 |
| 25 | 5.39 | 1.62 | 5.93 | 3.81 | 4.86 | 3.47 |
| 15 | 6.06 | 1.82 | 6.67 | 5.49 | 7.02 | 5.01 |
| 10 | 6.52 | 1.96 | 7.17 | 7.21 | 8.41 | 6.35 |
| DB | Water flow temperature 5℃ | | | | | |
| 45 | 4.14 | 1.24 | 4.97 | 1.75 | 2.10 | 1.58 |
| 35 | 4.79 | 1.44 | 5.75 | 2.15 | 2.93 | 2.20 |
| 25 | 5.35 | 1.61 | 6.42 | 3.41 | 4.09 | 3.09 |
| 15 | 5.94 | 1.78 | 7.12 | 4.91 | 5.98 | 4.46 |
| 10 | 6.28 | 1.88 | 7.54 | 6.94 | 7.74 | 5.65 |

| AU112FYCRA(HW) | | | | | | |
|---|---|---|---|---|---|---|
| Air temp. | Capacity(kW) Nom. | Capacity(kW) Min. | Capacity(kW) Max. | EER(EN14511) Nom. | EER(EN14511) Min. | EER(EN14511) Max. |
| DB | Water flow temperature 20℃ | | | | | |
| 45 | 12.78 | 3.83 | 13.42 | 3.66 | 4.51 | 3.25 |
| 35 | 13.91 | 4.17 | 14.60 | 4.87 | 6.56 | 4.25 |
| 25 | 15.64 | 4.69 | 16.42 | 6.55 | 9.84 | 5.78 |
| 15 | 17.19 | 5.16 | 18.05 | 9.13 | 10.71 | 7.33 |
| 10 | 17.70 | 5.31 | 18.59 | 11.41 | 11.75 | 11.38 |
| DB | Water flow temperature 18℃ | | | | | |
| 45 | 12.41 | 3.72 | 13.03 | 3.45 | 4.25 | 3.06 |
| 35 | 13.50 | 4.05 | 14.18 | 4.60 | 6.19 | 4.01 |
| 25 | 15.18 | 4.55 | 15.94 | 6.18 | 9.29 | 5.45 |
| 15 | 16.69 | 5.01 | 17.52 | 8.61 | 10.40 | 6.91 |
| 10 | 16.75 | 5.03 | 17.59 | 11.08 | 11.93 | 10.74 |
| DB | Water flow temperature 15℃ | | | | | |
| 45 | 11.87 | 3.56 | 13.05 | 2.83 | 3.49 | 2.51 |
| 35 | 13.22 | 4.63 | 14.54 | 3.81 | 5.07 | 3.29 |
| 25 | 14.43 | 5.05 | 15.88 | 5.06 | 7.62 | 4.47 |
| 15 | 15.21 | 5.32 | 16.73 | 7.06 | 8.52 | 5.67 |
| 10 | 15.97 | 5.59 | 17.57 | 9.08 | 9.78 | 8.80 |
| DB | Water flow temperature 10℃ | | | | | |
| 45 | 10.24 | 3.17 | 11.77 | 2.49 | 3.07 | 2.21 |
| 35 | 12.91 | 4.00 | 14.85 | 3.35 | 4.46 | 2.90 |
| 25 | 13.96 | 4.33 | 16.05 | 4.46 | 6.70 | 3.94 |
| 15 | 15.31 | 4.75 | 17.61 | 6.21 | 7.50 | 4.99 |
| 10 | 15.91 | 4.93 | 18.29 | 7.99 | 8.61 | 7.75 |
| DB | Water flow temperature 7℃ | | | | | |
| 45 | 9.77 | 2.93 | 10.74 | 2.14 | 2.46 | 1.96 |
| 35 | 11.50 | 3.45 | 11.60 | 3.00 | 3.40 | 3.03 |
| 25 | 12.90 | 3.87 | 14.19 | 3.88 | 4.69 | 3.47 |
| 15 | 14.14 | 4.24 | 15.56 | 5.24 | 6.74 | 4.54 |
| 10 | 15.25 | 4.58 | 16.78 | 7.64 | 8.45 | 6.62 |
| DB | Water flow temperature 5℃ | | | | | |
| 45 | 9.39 | 2.82 | 10.32 | 2.07 | 2.26 | 1.88 |
| 35 | 10.76 | 3.23 | 11.83 | 2.84 | 3.12 | 2.91 |
| 25 | 12.11 | 3.63 | 13.32 | 3.77 | 4.32 | 3.34 |
| 15 | 13.25 | 3.97 | 14.57 | 5.05 | 6.20 | 4.36 |
| 10 | 14.03 | 4.21 | 15.43 | 6.08 | 7.77 | 6.36 |

| AU162FYCRA(HW) | | | | | | |
|---|---|---|---|---|---|---|
| Air temp. | Capacity(kW) Nom. | Capacity(kW) Min. | Capacity(kW) Max. | EER(EN14511) Nom. | EER(EN14511) Min. | EER(EN14511) Max. |
| DB | Water flow temperature 20℃ | | | | | |
| 45 | 15.05 | 4.64 | 15.80 | 3.15 | 4.34 | 3.15 |
| 35 | 16.80 | 5.18 | 17.64 | 4.62 | 6.34 | 3.97 |
| 25 | 19.05 | 5.88 | 20.00 | 5.88 | 9.56 | 5.09 |
| 15 | 20.95 | 6.46 | 21.99 | 8.29 | 11.35 | 6.46 |
| 10 | 21.13 | 6.52 | 23.25 | 11.37 | 12.01 | 10.53 |
| DB | Water flow temperature 18℃ | | | | | |
| 45 | 14.33 | 4.30 | 15.05 | 3.00 | 4.14 | 3.00 |
| 35 | 16.00 | 4.80 | 16.80 | 4.40 | 6.04 | 3.78 |
| 25 | 18.14 | 5.44 | 19.05 | 5.60 | 9.10 | 4.85 |
| 15 | 19.95 | 5.98 | 20.95 | 7.89 | 10.81 | 6.15 |
| 10 | 20.13 | 6.04 | 22.14 | 10.83 | 11.43 | 10.03 |
| DB | Water flow temperature 15℃ | | | | | |
| 45 | 12.05 | 3.61 | 13.25 | 2.74 | 3.65 | 2.74 |
| 35 | 15.30 | 4.59 | 16.06 | 3.62 | 5.26 | 3.44 |
| 25 | 15.53 | 4.66 | 18.63 | 5.01 | 7.81 | 4.45 |
| 15 | 17.05 | 5.12 | 20.46 | 6.81 | 11.47 | 5.68 |
| 10 | 17.53 | 5.26 | 21.03 | 10.50 | 11.20 | 9.63 |
| DB | Water flow temperature 10℃ | | | | | |
| 45 | 11.44 | 3.43 | 12.59 | 2.33 | 2.85 | 2.31 |
| 35 | 14.84 | 4.45 | 16.32 | 3.00 | 4.02 | 2.89 |
| 25 | 14.13 | 4.24 | 15.54 | 4.04 | 5.75 | 3.77 |
| 15 | 15.52 | 4.66 | 17.07 | 5.41 | 8.78 | 4.88 |
| 10 | 15.95 | 4.79 | 17.55 | 9.78 | 10.58 | 9.47 |
| DB | Water flow temperature 7℃ | | | | | |
| 45 | 11.18 | 3.36 | 12.30 | 2.35 | 2.69 | 2.32 |
| 35 | 14.50 | 4.35 | 16.53 | 2.95 | 3.74 | 2.89 |
| 25 | 13.71 | 4.11 | 15.08 | 3.93 | 5.17 | 3.79 |
| 15 | 15.05 | 4.52 | 16.56 | 5.19 | 7.45 | 4.97 |
| 10 | 15.47 | 4.64 | 17.02 | 7.58 | 9.59 | 7.24 |
| DB | Water flow temperature 5℃ | | | | | |
| 45 | 10.16 | 3.05 | 11.18 | 2.24 | 2.46 | 2.20 |
| 35 | 13.24 | 3.97 | 14.56 | 2.80 | 3.36 | 2.73 |
| 25 | 13.43 | 4.03 | 14.77 | 3.65 | 4.51 | 3.63 |
| 15 | 14.75 | 4.43 | 16.23 | 4.78 | 6.13 | 4.78 |
| 10 | 15.16 | 4.55 | 16.68 | 5.23 | 8.05 | 4.85 |

## 10.2 Heating capacity

| AU082FYCRA(HW) | | | | | | | |
|---|---|---|---|---|---|---|---|
| Air temp. | | Capacity(kW) Nom. | Capacity(kW) Min. | Capacity(kW) Max. | COP(EN14511) Nom. | COP(EN14511) Min. | COP(EN14511) Max. |
| DB | WB | Water flow temperature 25℃ | | | | | |
| 35 | 24 | 13.06 | 4.81 | 14.14 | 7.05 | 7.61 | 6.75 |
| 27 | 19 | 12.26 | 4.01 | 13.34 | 6.61 | 7.19 | 6.03 |
| 20 | 19 | 11.46 | 3.21 | 12.54 | 6.20 | 6.67 | 5.35 |
| 10 | 9 | 9.20 | 2.66 | 10.06 | 4.90 | 5.27 | 4.25 |
| 7 | 6 | 8.47 | 2.49 | 9.29 | 4.73 | 4.85 | 4.04 |
| 2 | 1 | 6.23 | 1.95 | 6.85 | 3.53 | 3.86 | 3.07 |
| 0 | -1 | 5.81 | 1.85 | 6.28 | 3.48 | 3.80 | 2.97 |
| -3 | -4 | 5.40 | 1.75 | 5.88 | 3.33 | 3.61 | 2.80 |
| -7 | -8 | 4.74 | 1.63 | 5.15 | 3.14 | 3.36 | 2.51 |
| -15 | -16 | 4.12 | 1.48 | 4.47 | 2.97 | 3.18 | 2.40 |
| -20 | -21 | 2.54 | 1.08 | 2.73 | 2.96 | 3.03 | 2.27 |
| DB | WB | Water flow temperature 35℃ | | | | | |
| 35 | 24 | 12.46 | 4.21 | 13.54 | 6.75 | 7.31 | 6.45 |
| 27 | 19 | 11.66 | 3.41 | 12.74 | 6.31 | 6.89 | 5.73 |
| 20 | 19 | 10.86 | 2.61 | 11.94 | 5.90 | 6.37 | 5.05 |
| 10 | 9 | 8.60 | 2.06 | 9.46 | 4.60 | 4.97 | 3.95 |
| 7 | 6 | 7.80 | 1.87 | 8.69 | 4.40 | 4.55 | 3.74 |
| 2 | 1 | 5.63 | 1.35 | 6.25 | 3.23 | 3.56 | 2.77 |
| 0 | -1 | 5.21 | 1.25 | 5.68 | 3.18 | 3.50 | 2.67 |
| -3 | -4 | 4.80 | 1.15 | 5.28 | 3.03 | 3.31 | 2.50 |
| -7 | -8 | 4.14 | 1.03 | 4.55 | 2.84 | 3.06 | 2.21 |
| -15 | -16 | 3.52 | 0.88 | 3.87 | 2.67 | 2.88 | 2.10 |
| -20 | -21 | 1.94 | 0.48 | 2.13 | 2.66 | 2.73 | 1.97 |
| DB | WB | Water flow temperature 45℃ | | | | | |
| 35 | 24 | 11.53 | 3.58 | 12.87 | 5.98 | 6.58 | 5.86 |
| 27 | 19 | 10.98 | 2.74 | 12.14 | 5.31 | 5.78 | 5.03 |
| 20 | 19 | 10.61 | 2.50 | 11.46 | 4.73 | 5.09 | 4.35 |
| 10 | 9 | 8.35 | 1.98 | 9.02 | 3.75 | 3.98 | 3.45 |
| 7 | 6 | 7.50 | 1.80 | 8.65 | 3.20 | 3.64 | 3.18 |
| 2 | 1 | 5.36 | 1.30 | 5.89 | 2.78 | 2.85 | 2.36 |
| 0 | -1 | 5.00 | 1.20 | 5.50 | 2.64 | 2.80 | 2.25 |
| -3 | -4 | 4.63 | 1.10 | 5.09 | 2.55 | 2.65 | 2.07 |
| -7 | -8 | 4.00 | 0.99 | 4.40 | 2.43 | 2.45 | 1.90 |
| -15 | -16 | 3.48 | 0.84 | 3.83 | 2.30 | 2.16 | 1.85 |
| -20 | -21 | 1.32 | 0.46 | 1.45 | 2.18 | 2.04 | 1.80 |
| DB | WB | Water flow temperature 55℃ | | | | | |
| 35 | 24 | 10.89 | 3.10 | 11.97 | 5.19 | 5.12 | 4.65 |
| 27 | 19 | 10.05 | 2.54 | 11.24 | 4.56 | 4.53 | 3.97 |
| 20 | 19 | 9.47 | 2.30 | 10.41 | 3.54 | 3.82 | 3.26 |
| 10 | 9 | 7.58 | 1.82 | 8.34 | 4.07 | 2.98 | 2.58 |
| 7 | 6 | 7.01 | 1.65 | 7.71 | 2.54 | 2.73 | 2.38 |
| 2 | 1 | 5.08 | 1.19 | 5.59 | 2.21 | 2.14 | 1.77 |
| 0 | -1 | 4.71 | 1.11 | 5.18 | 2.04 | 2.10 | 1.69 |
| -3 | -4 | 4.42 | 1.02 | 4.87 | 1.94 | 1.99 | 1.55 |
| -7 | -8 | 3.77 | 0.91 | 4.14 | 1.82 | 1.84 | 1.43 |
| -15 | -16 | 0.87 | 0.78 | 0.95 | 2.08 | 1.62 | 1.38 |
| -20 | -21 | 0.51 | 0.43 | 0.56 | 1.83 | 1.53 | 1.35 |

| AU112FYCRA(HW) | | | | | | | |
|---|---|---|---|---|---|---|---|
| Air temp. | | Capacity(kW) Nom. | Capacity(kW) Min. | Capacity(kW) Max. | COP(EN14511) Nom. | COP(EN14511) Min. | COP(EN14511) Max. |
| DB | WB | Water flow temperature 25℃ | | | | | |
| 35 | 24 | 18.30 | 5.49 | 19.58 | 8.09 | 8.22 | 7.28 |
| 27 | 19 | 17.50 | 5.25 | 18.73 | 7.36 | 7.47 | 6.62 |
| 20 | 19 | 16.30 | 4.89 | 17.44 | 6.69 | 6.80 | 6.02 |
| 10 | 9 | 13.90 | 4.17 | 14.88 | 5.11 | 5.19 | 4.59 |
| 7 | 6 | 12.00 | 3.60 | 12.84 | 4.62 | 4.70 | 4.17 |
| 2 | 1 | 9.74 | 2.92 | 10.42 | 3.69 | 3.75 | 3.32 |
| 0 | -1 | 9.49 | 2.85 | 10.15 | 3.56 | 3.62 | 3.20 |
| -3 | -4 | 8.82 | 2.65 | 9.44 | 3.39 | 3.45 | 3.05 |
| -7 | -8 | 7.93 | 2.38 | 8.49 | 2.99 | 3.04 | 2.70 |
| -15 | -16 | 7.43 | 2.23 | 7.95 | 2.71 | 2.74 | 2.44 |
| -20 | -21 | 4.22 | 1.26 | 4.51 | 2.47 | 2.49 | 2.24 |
| DB | WB | Water flow temperature 35℃ | | | | | |
| 35 | 24 | 17.4 | 5.23 | 18.30 | 7.36 | 7.56 | 7.14 |
| 27 | 19 | 16.3 | 4.89 | 17.12 | 6.69 | 6.98 | 6.49 |
| 20 | 19 | 15.30 | 4.59 | 16.07 | 6.08 | 6.18 | 5.47 |
| 10 | 9 | 12.90 | 3.87 | 14.55 | 4.64 | 4.72 | 4.17 |
| 7 | 6 | 11.00 | 3.30 | 14.06 | 4.20 | 4.28 | 3.79 |
| 2 | 1 | 8.74 | 2.62 | 9.18 | 3.36 | 3.41 | 3.02 |
| 0 | -1 | 8.49 | 2.55 | 8.91 | 3.24 | 3.29 | 2.91 |
| -3 | -4 | 7.82 | 2.35 | 8.21 | 3.08 | 3.13 | 2.77 |
| -7 | -8 | 6.93 | 2.08 | 7.28 | 2.72 | 2.76 | 2.45 |
| -15 | -16 | 6.43 | 1.93 | 6.75 | 2.46 | 2.49 | 2.21 |
| -20 | -21 | 3.22 | 0.96 | 3.38 | 2.25 | 2.27 | 2.04 |
| DB | WB | Water flow temperature 45℃ | | | | | |
| 35 | 24 | 16.8 | 5.04 | 18.48 | 5.39 | 5.42 | 4.55 |
| 27 | 19 | 15.68 | 4.70 | 17.25 | 4.56 | 4.83 | 3.87 |
| 20 | 19 | 14.42 | 4.33 | 15.86 | 4.37 | 4.44 | 2.78 |
| 10 | 9 | 12.19 | 3.66 | 14.62 | 3.69 | 3.75 | 3.20 |
| 7 | 6 | 10.50 | 3.15 | 13.65 | 3.20 | 3.54 | 3.06 |
| 2 | 1 | 7.21 | 2.16 | 7.93 | 3.00 | 3.07 | 2.58 |
| 0 | -1 | 6.85 | 2.06 | 7.54 | 2.78 | 2.83 | 2.41 |
| -3 | -4 | 6.32 | 1.89 | 6.95 | 2.66 | 2.69 | 2.30 |
| -7 | -8 | 5.64 | 1.69 | 6.20 | 2.41 | 2.56 | 2.18 |
| -15 | -16 | 5.13 | 1.54 | 5.65 | 2.31 | 2.46 | 2.09 |
| -20 | -21 | 2.57 | 0.77 | 2.82 | 2.16 | 2.30 | 1.97 |
| DB | WB | Water flow temperature 55℃ | | | | | |
| 35 | 24 | 15.45 | 4.64 | 17.00 | 4.17 | 4.51 | 3.89 |
| 27 | 19 | 14.56 | 4.37 | 16.02 | 3.43 | 3.46 | 3.31 |
| 20 | 19 | 13.42 | 4.03 | 14.76 | 2.80 | 2.87 | 2.77 |
| 10 | 9 | 11.12 | 3.33 | 12.23 | 2.39 | 2.44 | 2.37 |
| 7 | 6 | 9.99 | 3.00 | 10.99 | 2.27 | 2.31 | 2.26 |
| 2 | 1 | 8.40 | 2.52 | 9.24 | 2.00 | 2.03 | 1.98 |
| 0 | -1 | 7.98 | 2.39 | 8.78 | 1.89 | 1.92 | 1.87 |
| -3 | -4 | 7.22 | 2.17 | 7.94 | 1.80 | 1.83 | 1.78 |
| -7 | -8 | 6.18 | 1.85 | 6.80 | 1.64 | 1.67 | 1.62 |
| -15 | -16 | 2.78 | 0.84 | 3.06 | 1.57 | 1.54 | 1.52 |
| -20 | -21 | 1.10 | 0.44 | 1.21 | 1.38 | 1.41 | 1.36 |

Haier

| AU162FYCRA(HW) | | | | | | | |
|---|---|---|---|---|---|---|---|
| Air temp. | | Capacity(kW) Nom. | Capacity(kW) Min. | Capacity(kW) Max. | COP(EN14511) Nom. | COP(EN14511) Min. | COP(EN14511) Max. |
| DB | WB | Water flow temperature 25℃ | | | | | |
| 35 | 24 | 26.30 | 6.31 | 28.93 | 7.32 | 7.84 | 6.74 |
| 27 | 19 | 24.90 | 5.97 | 27.39 | 6.90 | 7.40 | 6.35 |
| 20 | 19 | 23.61 | 5.67 | 25.97 | 6.51 | 6.98 | 5.99 |
| 10 | 9 | 18.84 | 4.52 | 20.72 | 5.05 | 5.33 | 4.65 |
| 7 | 6 | 17.44 | 4.19 | 19.18 | 4.57 | 4.83 | 4.27 |
| 2 | 1 | 11.08 | 2.66 | 12.19 | 3.43 | 3.68 | 3.14 |
| 0 | -1 | 10.14 | 2.43 | 11.15 | 3.06 | 3.50 | 2.76 |
| -3 | -4 | 9.90 | 2.38 | 10.89 | 3.04 | 3.34 | 2.75 |
| -7 | -8 | 9.33 | 2.24 | 10.26 | 2.87 | 2.98 | 2.46 |
| -15 | -16 | 8.65 | 2.08 | 9.52 | 2.71 | 2.81 | 2.51 |
| -20 | -21 | 5.19 | 1.25 | 5.71 | 1.97 | 2.14 | 1.82 |
| DB | WB | Water flow temperature 35℃ | | | | | |
| 35 | 24 | 24.13 | 5.55 | 26.30 | 6.65 | 7.13 | 6.12 |
| 27 | 19 | 22.84 | 5.25 | 24.90 | 6.27 | 6.72 | 5.78 |
| 20 | 19 | 21.66 | 4.98 | 23.61 | 5.92 | 6.34 | 5.45 |
| 10 | 9 | 17.28 | 3.97 | 18.84 | 4.59 | 4.84 | 4.23 |
| 7 | 6 | 16.00 | 3.68 | 17.01 | 4.15 | 4.39 | 3.89 |
| 2 | 1 | 10.17 | 2.34 | 11.08 | 3.12 | 3.35 | 2.86 |
| 0 | -1 | 9.30 | 2.14 | 10.14 | 2.78 | 3.18 | 2.51 |
| -3 | -4 | 9.08 | 2.09 | 9.90 | 2.76 | 3.04 | 2.50 |
| -7 | -8 | 8.56 | 1.97 | 9.33 | 2.61 | 2.71 | 2.23 |
| -15 | -16 | 7.94 | 1.98 | 8.65 | 2.46 | 2.55 | 2.28 |
| -20 | -21 | 4.76 | 1.19 | 5.19 | 1.79 | 1.94 | 1.66 |
| DB | WB | Water flow temperature 45℃ | | | | | |
| 35 | 24 | 21.83 | 5.02 | 23.79 | 4.58 | 5.63 | 4.93 |
| 27 | 19 | 20.94 | 4.82 | 22.82 | 4.32 | 5.31 | 4.65 |
| 20 | 19 | 19.87 | 4.37 | 21.85 | 4.08 | 5.01 | 4.39 |
| 10 | 9 | 16.70 | 3.67 | 18.36 | 3.44 | 3.83 | 3.41 |
| 7 | 6 | 15.00 | 3.30 | 16.46 | 3.25 | 3.47 | 3.13 |
| 2 | 1 | 9.77 | 2.15 | 10.74 | 2.68 | 2.64 | 2.30 |
| 0 | -1 | 9.04 | 1.99 | 9.94 | 2.52 | 2.51 | 2.02 |
| -3 | -4 | 8.82 | 1.94 | 9.70 | 2.42 | 2.40 | 2.01 |
| -7 | -8 | 8.40 | 1.85 | 9.24 | 2.29 | 2.14 | 1.80 |
| -15 | -16 | 7.40 | 1.63 | 8.14 | 1.82 | 2.02 | 1.83 |
| -20 | -21 | 3.15 | 0.91 | 3.47 | 1.72 | 1.53 | 1.33 |
| DB | WB | Water flow temperature 55℃ | | | | | |
| 35 | 24 | 20.43 | 4.70 | 22.27 | 3.54 | 4.22 | 3.70 |
| 27 | 19 | 19.14 | 4.40 | 20.86 | 3.34 | 3.98 | 3.49 |
| 20 | 19 | 18.31 | 4.03 | 20.15 | 3.15 | 3.76 | 3.29 |
| 10 | 9 | 17.60 | 3.87 | 19.36 | 2.66 | 2.87 | 2.55 |
| 7 | 6 | 14.01 | 3.08 | 15.41 | 2.49 | 2.60 | 2.35 |
| 2 | 1 | 9.30 | 2.05 | 10.23 | 1.97 | 1.98 | 1.72 |
| 0 | -1 | 8.83 | 1.94 | 9.71 | 1.86 | 1.89 | 1.52 |
| -3 | -4 | 8.06 | 1.77 | 8.87 | 1.77 | 1.80 | 1.51 |
| -7 | -8 | 7.58 | 1.67 | 8.34 | 1.65 | 1.60 | 1.35 |
| -15 | -16 | 3.50 | 1.47 | 3.85 | 1.57 | 1.51 | 1.38 |
| -20 | -21 | 1.48 | 0.67 | 1.63 | 1.49 | 1.15 | 1.00 |

## 11. Operation Limits Delivery-Leaving

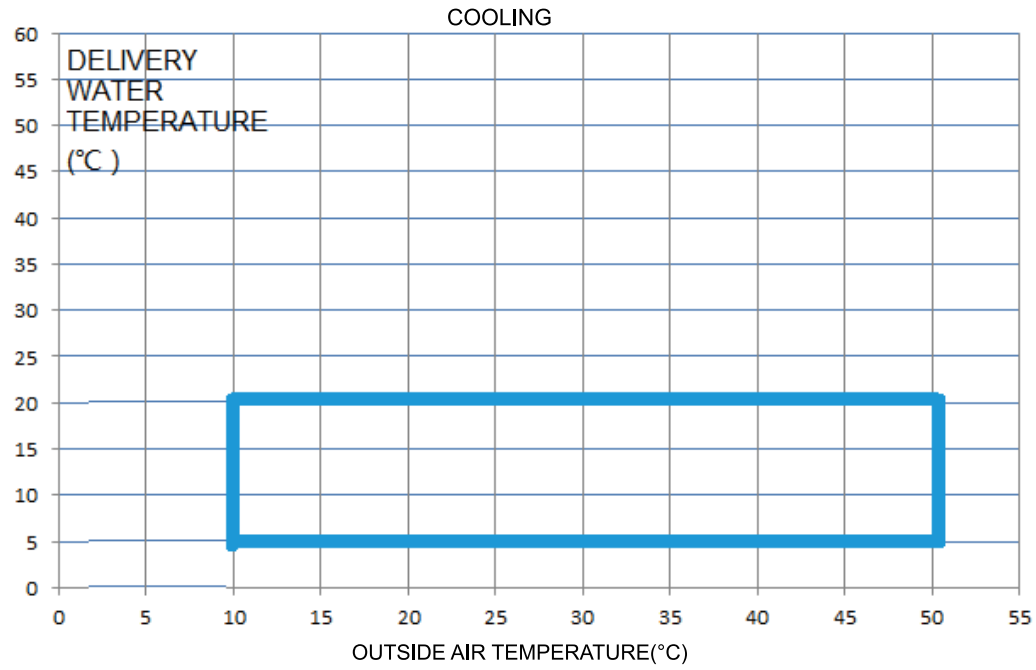


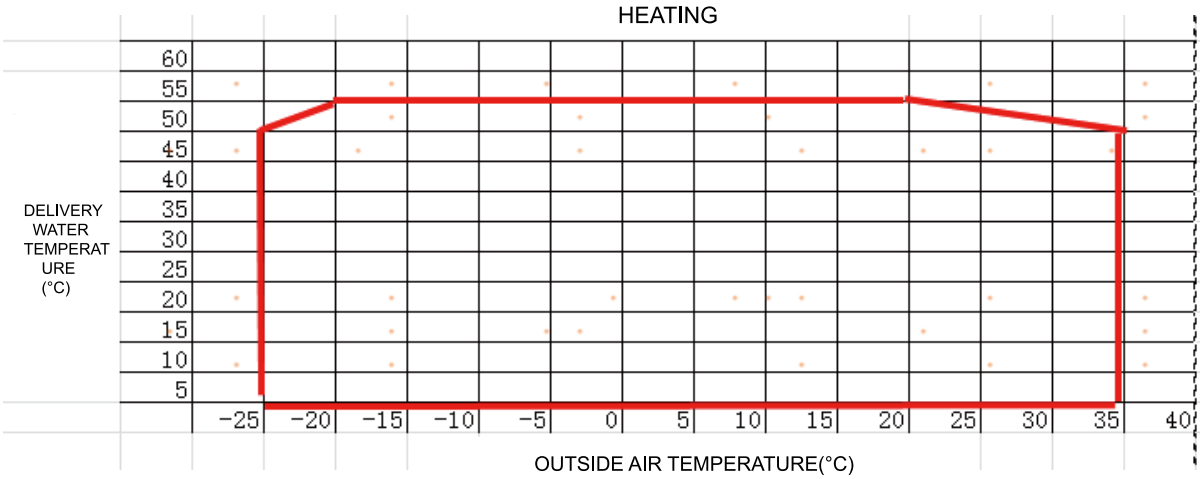


**a)Ethylene Glycol Solutions**

Water and ethylene glycol solutions used as a thermal vector in the place of water reduce the performance of the unit. Multiply the performance figures by the values given in the following table.

| Freezing point ( C) | | | | | | |
|---|---|---|---|---|---|---|
| | 0 | -5 | -10 | -15 | -20 | -25 |
| Percentage of ethylene glycol in weight | | | | | | |
| | 0 | 12% | 20% | 28% | 35% | 40% |
| cPf | 1 | 0.98 | 0.97 | 0.965 | 0.96 | 0.955 |
| cQ | 1 | 1.02 | 1.04 | 1.075 | 1.11 | 1.14 |
| cdp | 1 | 1.07 | 1.11 | 1.18 | 1.22 | 1.24 |

**cPf:** correction factor of heating/cooling capacity
**cQ:** correction factor of flow rate
**cdp:** correction factor of pressure drop

**Note:**
1. During winter leaving the unit unused, please drain water out completely from unit if no anti-freeze were charged into pipeline, or keep power on (at standby or off status) and ensure that water is contained inside of unit.
2. When ambient temperature lower 5, running cooling mode must be charged antifreeze. Refers to upper parameters for the charged volume.

**b) Fouling Factors**
The performance data given refer to conditions with clean evaporator plates (fouling factor=1). For different fouling factors, multiply the figures in the performance tables by the coefficient given in the following table.

| Fouling factors | Evaporator | | |
|---|---|---|---|
| (m 2 °C/W) | f1 | fk1 | fx1 |
| 4.4×10-5 | - | - | - |
| 0.86×10-4 | 0.96 | 0.99 | 0.99 |
| 1.72×10-4 | 0.93 | 0.98 | 0.98 |

**f1**: correction factor of capacity
**fk1**: power input correction factor of compressor
**fx1**: correction factor of total power input

## 12. Water Pressure Drop

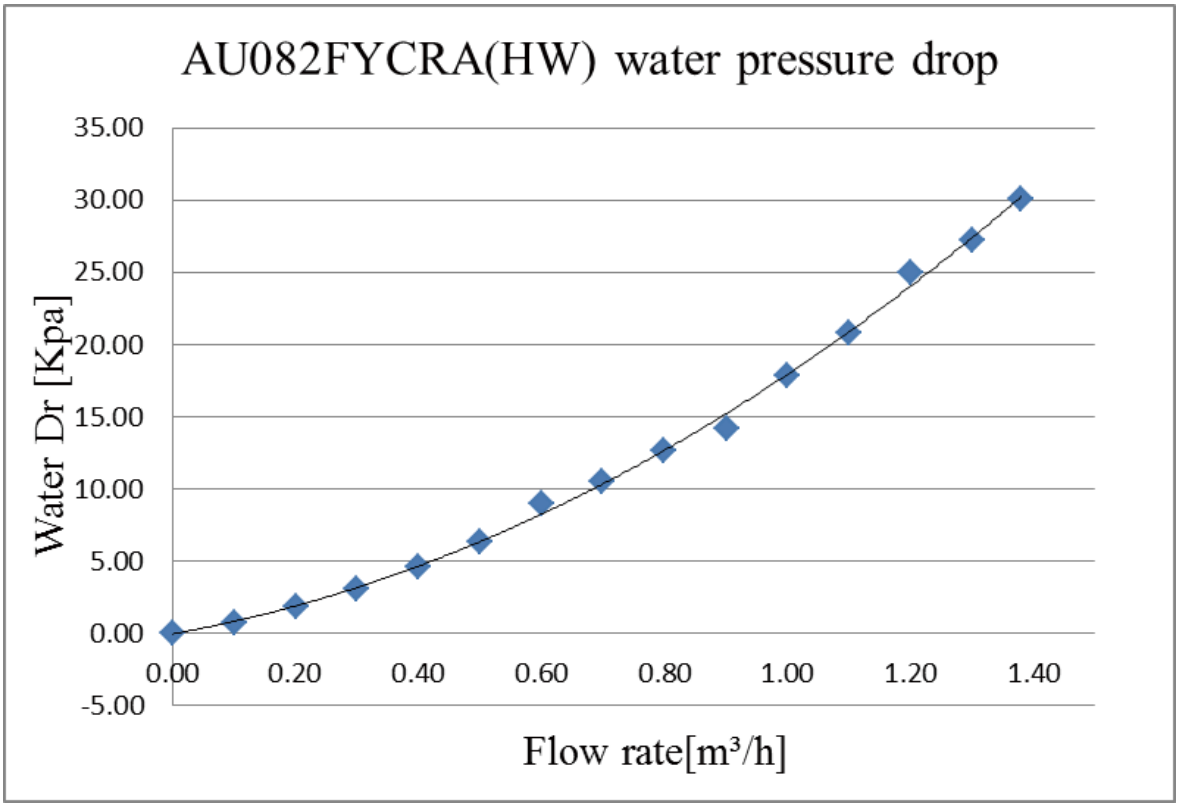


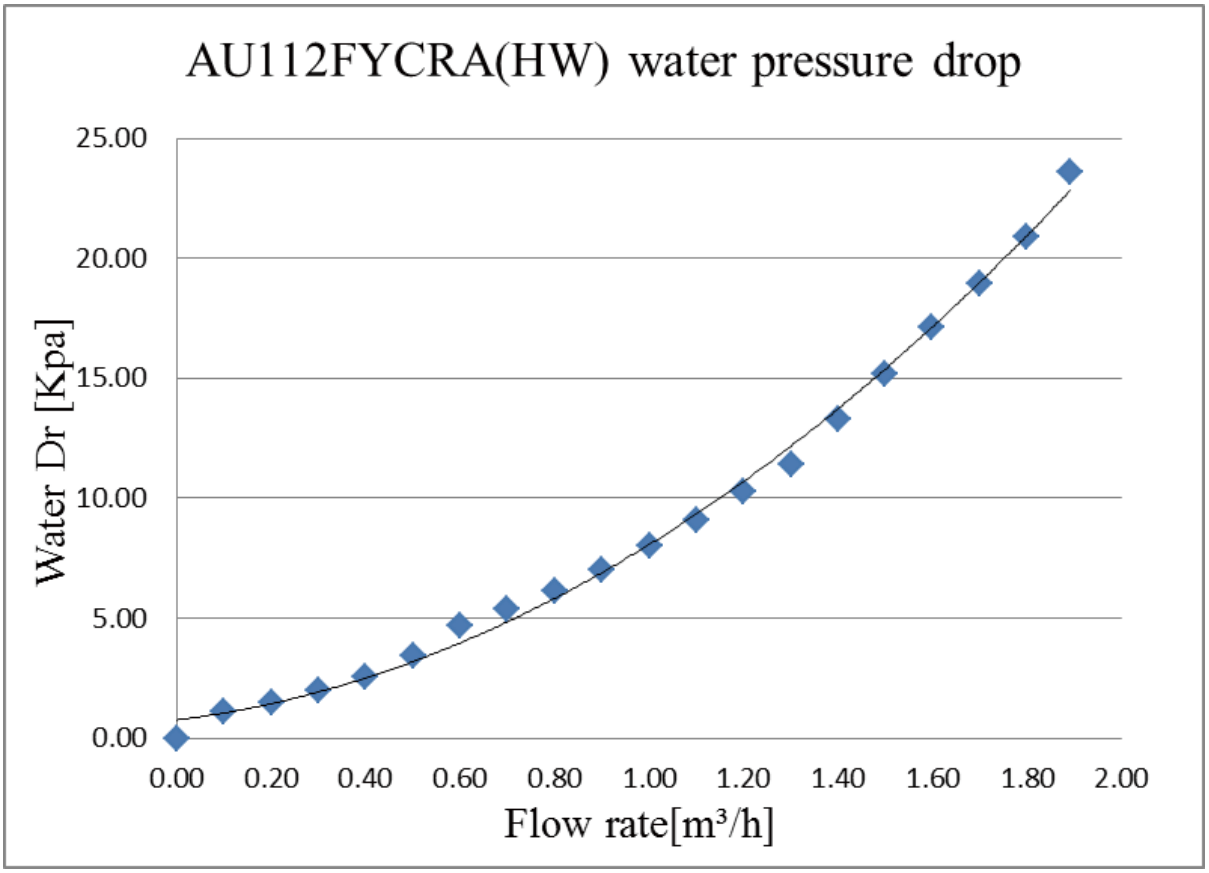

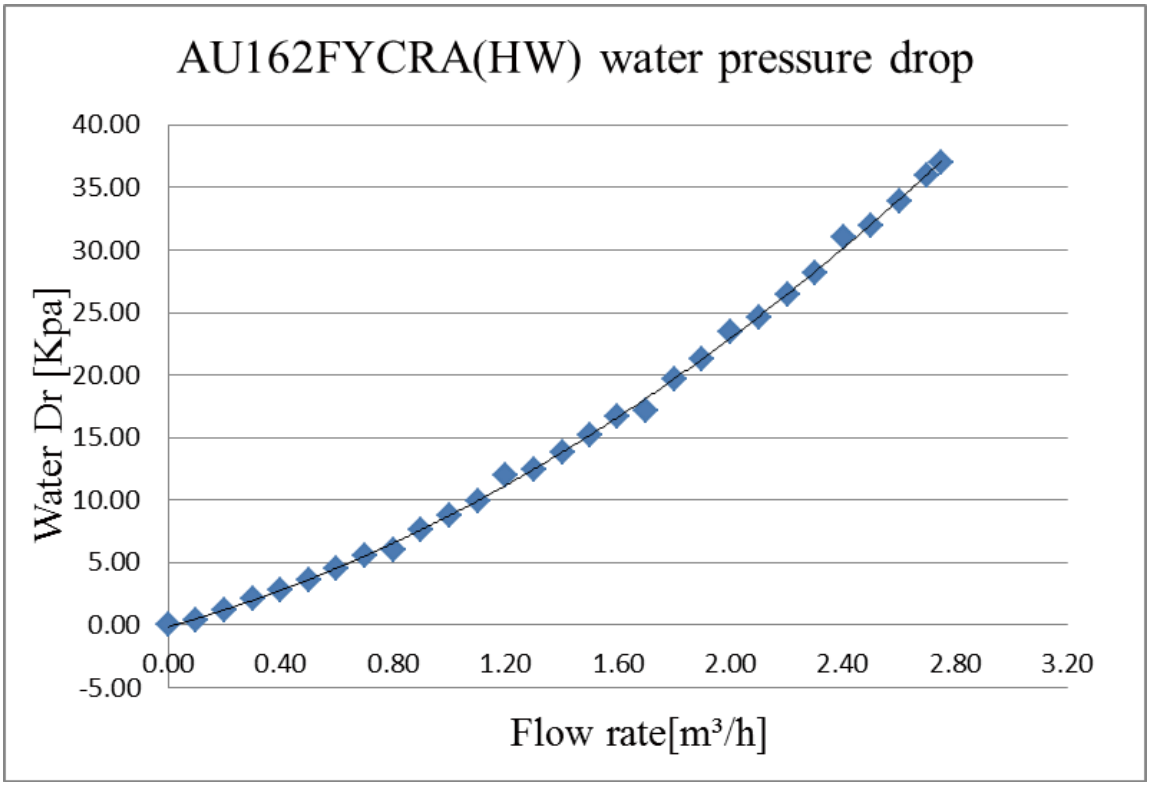
AU162FYCRA(HW) water pressure drop
Water Dr [Kpa]
40.00
35.00
30.00
25.00
20.00
15.00
10.00
5.00
0.00
-5.00
0.00
0.40
0.80
1.20
1.60
2.00
2.40
2.80
3.20
Flow rate[m³/h]

## 13. Sound Level

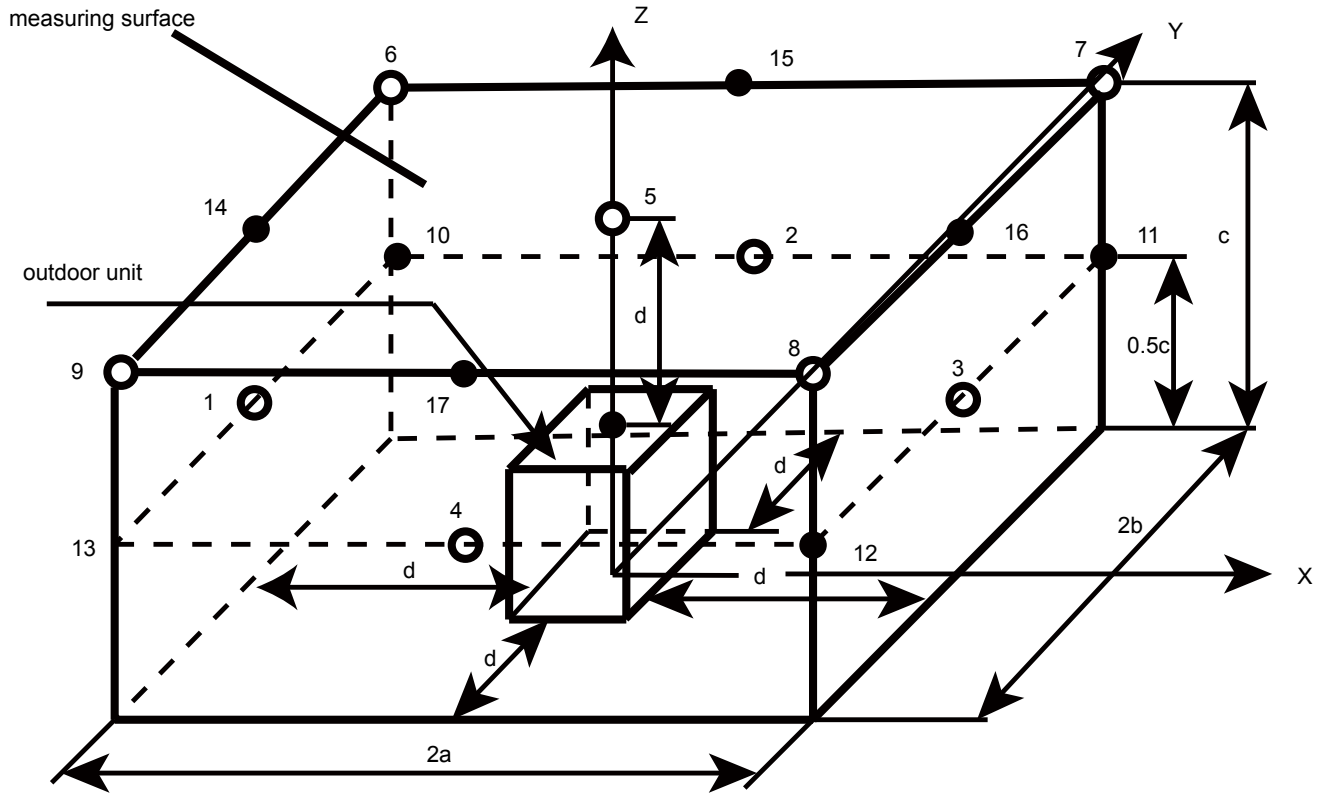


| Model | Noise level (dB) |
|---|---|
| AU082FCYRA(HW) | 61 |
| AU112FCYRA(HW) | 63 |
| AU162FCYRA(HW) | 68 |

Note:
It is tested 1 meter(d) away from the machine in a semi-anechoic room (sound power).

## 14. Installation

### EUROPEAN REGULATIONS CONFORMITY FOR THE MODELS

CE

All the products are in conformity with the following European provision:
-Low voltage Directive
-Electomagnetic Compatibility

ROHS

The products are fulfilled with the requirements in the directive 2011/65/EU of the European parliament and of council on the Restriction of the use of Certain Hazardous Substances in Electrical and Electronic Equipment(EU RoHS Directive)

WEEE

In accordance with the directive 2012/19/EU of the European parliament, herewith we inform the consumer about the dis-posal requirements of the electrical and electronic products.

DISPOSAL REQUIREMENTS:

Your air conditioning product is marked with this symbol.This means that electrical and electronic products shall not be mixed with unsorted household waste.Do not try to dismantle the system yourself:the dismantling of the air conditioning system,treatment of the refrigerant,of oil and of other part must be done by a qualified installer in accordance with relevant local and national legislation. Air conditioners must be treated at a specialized treatment facility for reuse, recycling and recovery.By ensuring this product is disposed of correctly,you will help to prevent potential negative cons-equences for the environment and human health.Please contact the installer or local authority for more information.
Battery must be removed from the remote controller and dis-posed of separately in accordance with relevant local and national legislation.

### IMPORTANT INFORMATION REGARDING THE REFRIGERANT USED

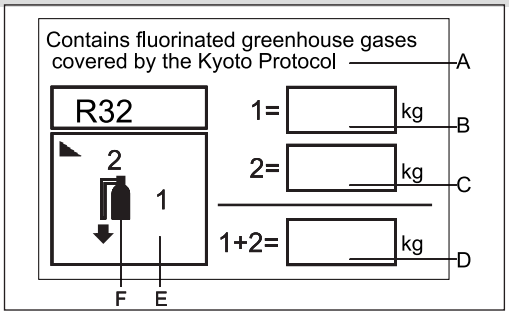


This product contains fluorinated greenhouse gases covered by the Kyoto Protocol.Do not vent into the atmosphere.
Refrigerant type:R32
GWP*value:675
GWP=global warming potential
Please fill in with indelible ink,
1 the factory refrigerant charge of the product
2 the additional refrigerant amount charged in the field and 1+2 the total refrigerant charge on the refrigerant charge label supplied with the product.
The filled out label must be adhered in the proximity of the product charging port(e.g.onto the inside of the stop value cover).
A contains fluorinated greenhouse gases covered by the Kyoto Protocol
B factory refrigerant charge of the product:see unit name plate
C additional refrigerant amount charged in the field
D total refrigerant charge
E outdoor unit
F refrigerant cylinder and manifold for charging

**⚠Warning**

- If the supply cord is damaged, it must be replaced by the manufacturer, its service agent or similarly qualified persons in order to avoid a hazard.
- This appliance is not intended for use by persons (including children) with reduced physical, sensory or mental capabilities, or lack of experience and knowledge, unless they have been given supervision or instruction concerning use of the appliance by a person responsible for their safety.
- Children should be supervised to ensure that they do not play with the appliance.
- This appliance can be used by children aged from 8 years and above and persons with reduced physical, sensory or mental capabilities or lack of experience and knowledge if they have been given supervision or instruction concerning use of the appliance in a safe way and understand the hazards involved. Children shall not play with the appliance. Cleaning and user maintenance shall not be made by children without supervision.
- The appliances are not intended to be operated by means of an external timer or separate remote-control system.
- Keep the appliance and its cord out of reach of children less than 8 years.
- Disconnect the appliance from its power source during maintenance service and when replacing parts.
- Air conditioner working temperature: cooling -10~46 degree, heating -15~24 degree.

## 14.1 Safety

| | | | |
|---|---|---|---|
| | Read the precautions in this manual carefully before operating the unit. | | This appliance is filled with R32. |
| | Read the operator's manual . | | Service indicator, read technical manual. |

After reading this handbook, hand it over to those who will be using the unit.
The user of the unit should keep this mamual at hand and make it available to those who will be performing repairs or relocating the unit. Also, make it available to the new user when the user changes hands.

### ⚠WARNING

- Ask your dealer or qualified personnel to carry out installation work.Do not attempt to install the air conditioner yourself. Improper Installation may result in water leakage, electric shocks, fire or explosion.
- All the cables shall have got the European authentication certificate. During installation, when the connecting cables break off, it must be assured that the grouding wire is the last one to be broken off.
- If refrigerant gas leaks during installation, ventilate the area immediately.oxic gas may be produced.if the refrigerant comes into contact with fire,and explosion may be happen.
- Make sure ground connection is correct and reliable.Do not earth the unit to a utility pipe, lightning conductor or telephone earth lead. Imperfect earthing may result in electric shocks.
- The breaker of the air conditioner should be all-pole switch and explosion-proof. The distance between its two contacts should not be no less than 3mm. Such means for disconnection must be incorporated in the wiring.
- The electrical sockets should be placed 1m above from the air conditioner, nor under the air conditioner. Be sure not to use open flame, high static electrical or high temperature equipments etc.nearby the air conditioner.
- Do not use means to accelerate the defrosting process or to clean, other than those recommended by the manufacturer.
- The appliance must be stored in a room without continuously operating ignition sources, the radius of the storage area should be no less than 2.5 m (for example:open flames, an operating gas appliance or an operating electric heater).
- Do not pierce or burn.
- Be aware that refrigerants may not contain an odour.
- The appliance must be installed, operated and stored in a room with a floor area larger than the Minimum Room Area specified in the table on the following pages,The room should be well ventilated.
- Comply with national gas regulations.
- This appliance can be used by children aged 8 years and above and persons with reduced physical, sensory or mental capabilities or lack of experience and knowledge if they have been given superivision or instruction concering use of the appliance in a safe way and understand the hazards involved. Children shall not play with the appliance. Cleaning and user maintenance shall not be made by children without supervision.
- The air conditioner can not be discarded or scrapped Randomly If you need please contact customer service personnel of Haier to scrap in order to obtain the correct disposal methods.
- Reusable mechanical connectors and flared joints are not allowed indoor.

### ⚠CAUTION

- Do not install the air conditioner at any place where there is danger of flammable gas leakage.In the event of a gas leakage, build-up of gas near the air conditioner may cause a fire to break out.
- Take adequate steps to prevent the outdoor unit being used as a shelter by small animals.Small animals.making contact with electrical parts can cause malfunctions, smoke or fire.
- Please instruct the customer to keep the area around the unit clean
- The temperature of refrigerant circuit will be high, please keep the inter-unit wire away from copper pipes that not thermally insulated.
- Only qualified personnel can handle, fill, purge and dispose of the refrigerant.

| ⚠WARNING |
| --- |
| The installation, maintenance, service and repair operations of this product shall be carried out by professional personnel, who have been trainedand certified by national training organizations that areaccredited to teach the relevant national competency standards that may be set in legislation.<br>Improper installation may cause water leakage, electrical shock, fire, or explosion. |
| Install the air conditioner according to the instructions given in this manual.<br>Incomplete installation may cause water leakage, electrical shock, fire, or explosion. |
| Be sure to use the supplied or specified installation parts.<br>Use of other parts may cause the unit to cometo lose, water leakage, electrical shock, fire, or explosion. |
| Install the air conditioner on a solid base that can support the unit's weight.<br>An inadequate base or incomplete installation may cause injury in the event the unit falls off the base. |
| Electrical work should be carried out in accordance with the installation manual and the national electrical wiring rules or code of practice.<br>Insufficient capacity or incomplete electrical work may cause electrical shock, fire, or explosion. |
| Be sure to use a dedicated power circuit. Never use a power supply shared by another appliance. |
| For wiring, use a cable long enough to cover the entire distance with no connection.<br>Do not use an extension cord. Do not put other loads on the power supply, use a dedicated power circuit.<br>(Failure to do so may cause abnormal heat, electrical shock, fire, or explosion.) |
| After connectiong interconnecting and supply wiring be sure to shape the cables so that they do not put undue force on the electrical covers or panels.<br>Install covers over the wires. Incomplete cover installation may cause terminal overheating, electrical shock, fire, or explosion. |
| If any refrigerant has leaked out during the installation work, ventilate the room.<br>(The refrigerant produces a toxic gas if exposed to flames, may cause explosion.) |
| After all installation is complete, check to make sure that no refrigerant is leaking out.<br>(The refrigerant produces a toxic gas if exposed to flames, may cause explosion.) |
| When installing or relocating the system, be sure to keep the refrigerant circuit free from substancs other than the specified refrigerant(R32), such as air.<br>(Any presence of air or other foreign substance in the refrigerant circuit causes an abnormal pressure rise or rupture, resulting in injury.) |
| During pump-down, stop the compressor before removing the refrigerant piping.<br>If the compressor is still running and the stop valve is open during pump-down, air will be sucked in when the compressor is run, causing abnormal pressure in the freezer cycle which will lead to breakage and even injury. |
| Be sure to establish an earth. Do not earth the unit to a utility pipe, arrester, or telephone earth.<br>Incomplete earth may cause electrical shock, fire, or explosion. A high surge current from lightning or other sources may cause damage to the air conditioner.<br>The installation of pipe-work shall be kept to a minimum.<br>Pipe-work shall be protected from physical damage and shall not be installed in an unventilated space, if that space is smaller than the Minimum Room Area specified in the table on the following pages.<br>Mechanical connections shall be accessible for maintenance purposes.<br>Information for handling, installation, cleaning, servicing and disposal of refrigerant.<br>Warning: Keep any required ventilation openings clear of obstruction.<br>Notice: Servicing shall be performed only as recommended by this manual instruction. |
| Be sure to install an earth leakage breaker.<br>Failure to install an earth leakage breaker may result in electric shocks, fire, or explosion. |

## Loading and Unloading/Transporting Management/Storage Requirements

**Loading and Unloading Requirements**

1) The products shall be carefully handled during loading and unloading.
2) Rude and barbarous handling such as kicking, throwing, dropping, bumping, pulling and rolling is not allowed.
3) The workers engaged in loading and unloading must be subject to necessary trainings on the potential hazards caused by barbarous handling.
4) Dry powder extinguishers or other suitable fire extinguishing apparatus within the period of validity shall be equipped at the loading and unloading site.
5) The untrained personnel cannot be engaged in loading and unloading of flammable refrigerants air conditioner.
6) Before loading and unloading, anti-static measures shall be taken, and phones cannot be answered during loading and unloading.
7) Smoking and open fire are not allowed around the air conditioner.

**Transporting Management Requirements**

1) The maximum transporting volume of finished products shall be determined as per local regulations.
2) The vehicles used for transporting shall be operated as per local laws and regulations.
3) Dedicated after-sales vehicles shall be used for maintenance, and exposed transporting of refrigerant cylinders and the products to be maintained is not allowed.
4) The rain cover or similar shielding material of transporting vehicles shall be provided with certain flame retardancy.
5) Leakage warning device of flammable refrigerant shall be installed inside the closed-type compartment.
6) Anti-static device shall be equipped inside the compartment of transporting vehicles.
7) Dry powder extinguishers or other suitable fire extinguishing apparatus within the period of validity shall be equipped inside the driver's cab.
8) Orange-white or red-white reflective stripes shall be pasted on the sides and tail of the transporting vehicles, to remind the vehicles behind of keeping distance.
9) The transporting vehicles shall run at a constant speed, and heavy acceleration/deceleration shall be avoided.
10) Combustibles or the static articles cannot be transported simultaneously.
11) High-temperature area shall be avoided during transporting, and necessary radiating measures shall be taken in case the temperature inside the compartment is too high.

**Storage Requirements**

1) The storage package of equipment used shall be such that no leakage of refrigerant will be caused due to mechanical damage of the equipment inside.
2) The appliance must be stored in a room without continuously operating ignition sources, the radius of the storage area should be no less than 2.5 m (for example:open flames, an operating gas appliance or an operating electric heater).
3) Do not pierce or burn.
4) The maximum quantity of the equipment allowed to be stored together shall be determined as per local regulations.

| Minimum Room Area | | | | | | | | | |
|---|---|---|---|---|---|---|---|---|---|
| Type | LFL kg/m3 | hv m | Total Mass Charged/kg Minimum Room Area/m | | | | | | |
| R32 | 0.306 | | 1.224 | 1.836 | 2.448 | 3.672 | 4.896 | 6.12 | 7.956 |
| | | 0.6 | | 29 | 51 | 116 | 206 | 321 | 543 |
| | | 1.0 | | 10 | 19 | 42 | 74 | 116 | 196 |
| | | 1.8 | | 3 | 6 | 13 | 23 | 36 | 60 |
| | | 2.2 | | 2 | 4 | 9 | 15 | 24 | 40 |

**Safety Awarenes**

1.Procedures: operation shall be made as per controlled procedures to minimize the probability of risks.
2.Area: area shall be divided and isolated appropriately, and operation in an enclosed space shall be avoided. Before the refrigeration system is started or before working, ventilation or opening of the area shall be guaranteed.
3.Site inspection: the refrigerant shall be checked.
4.Fire control: the fire extinguisher shall be placed nearby, and fire source or high temperature is not allowed; the sign of "No smoking"shall be arranged.

**Unpacking Inspection**

1.Indoor unit: nitrogen is sealed during the delivery of indoor units (inside the evaporator), and the red sign at the top of the green plastic seal cap on the evaporator air pipes of the indoor unit shall be checked first after unpacking. In case the sign is raised, the nitrogen sealed still exists. Afterwards, the black plastic seal cap at the joint of evaporator liquid pipes of the indoor unit shall be pressed, to check whether nitrogen still exists. In case no nitrogen is sprayed out, the indoor unit is subject to leakage, and installation is not allowed.

2.Outdoor unit: the leak detection equipment shall be extended into the packing box of the outdoor unit, to check whether the refrigerant is leaking. If the refrigerant leakage is identified, installation is not allowed, and the outdoor unit shall be delivered to the maintenance department.

**Inspection on Installation Environment**

1.Inspection on the surrounding environment of place of installation: the outdoor unit of flammable refrigerants air conditioner cannot be installed inside an enclosed room reserved.

2.Power supply, switches or other high-temperature articles such as the fire source and oil heater shall be avoided below the indoor unit.

3.The power supply shall be provided with earthing wire and be reliably earthed.

4.While punching the wall with an electric drill, whether embedded water/electricity/gas pipelines are designed at the hole preset by the user shall be verified in advance. It is recommended that the through-wall holes reserved shall be used as much as possible

**Safety Principles of Installation**

1. Favorable ventilation shall be maintained at the place of installation (doors and windows are opened).
2. Open fire or high-temperature heat source (including welding, smoking and oven) higher than 548 is not allowed within the scope of flammable refrigerant.
3. Anti-static measures shall be taken, such as the wearing of cotton clothes and cotton gloves.
4. The place of installation shall be convenient for installation or maintenance. Barriers shall be avoided around the air inlet/outlet of the indoor/outdoor unit, and the electrical appliance, power switches, sockets, valuables and high-temperature products within the scope of both sidelines of the indoor unit shall be avoided, and cannot be adjacent to heat source and flammable and combustible environment.
5. In case the product is damaged, it must be delivered to the maintenance point. Welding of refrigerant pipelines at the user's site is not allowed.

Caution, risk of fire

No Smoking

Cotton clothes

Anti-static gloves

BEWARE ELECTROSTATICS

Goggles

**Electrical Safety Requirements**

1.The surrounding conditions (ambient temperature, direct sunlight and rainwater) shall be noticed during electrical wiring, with effective protective measures being taken.

2.Copper wire cable in line with local standards shall be used as the power line and connector wire.

3.Outdoor unit shall be reliably earthed.

4.The dedicated branch circuit must be used, and leakage protector with sufficient capacity must be installed.

**Qualification Requirements of Installer**

Relevant qualification certificate must be obtained as per national laws and regulations.

**Outdoor Unit Installation**

Fixing and connection

Note:

a) Fire source shall be avoided within 3m around the place of installation.

b) The leak detection equipment of refrigerant shall be placed at a low position in the outdoor, and shall be opened.

Fixing
The support of the outdoor unit shall be fixed onto the wall surface, and then the outdoor unit shall be fixed onto the support horizontally. In case the outdoor unit is wall-mounted or roof-mounted, the support shall be firmly fixed, to avoid the damage of strong wind.

**Post-installation Inspection Items and Test Run**
Post-installation Inspection Items

| Items to Be Checked | Consequence of Improper Installation |
|---|---|
| Whether the installation is firm or not | The unit may fall, vibrate or make a noise |
| Whether the inspection on air leakage is completed | The refrigerating capacity (heating capacity) may be insufficient |
| Whether the unit is fully insulated | Condensation or drip may occur |
| Whether the drainage is smooth or not | Condensation or drip may occur |
| Whether the power voltage is identical to that marked on the nameplate | Failure may occur or the parts may be burned |
| Whether the circuit and pipeline are installed correctly | Failure may occur or the parts may be burned |
| Whether the unit is safely earthed | Electric leakage may occur |
| Whether the type of wire is in line with relevant regulations | Failure may occur or the parts may be burned |
| Whether barriers are identified at the air inlet/outlet of the outdoor unit | The refrigerating capacity (heating capacity) may be insufficient |

**Maintenance Instructions**
Maintenance Precautions
Precautions
- For all the faults requiring welding the refrigeration pipelines or components inside the refrigeration system of R32 refrigerant air conditioners, maintenance at the user's site is never allowed.
- For the faults requiring radical disassembly and bending operation of the heat exchanger, such as the replacement of the outdoor unit chassis and integral disassembly of the condenser, inspection and maintenance at the user's site are never allowed.
- For the faults requiring replacement of the compressor or parts & components of refrigeration system, maintenance at the user's site is not allowed.
- For other faults not involved in the refrigerant container, internal refrigeration pipelines and refrigeration elements, the maintenance at the user's site is allowed, including the cleaning and dredging of the refrigeration system requiring no disassembly of refrigeration elements and no welding.
- In case replacement of gas/liquid pipes is required during maintenance, the joint of evaporator gas/liquid pipes of the indoor unit shall be cut off with a cutting knife. Connection is only allowed after re-flaring (the same to the outdoor unit).

**Qualification Requirements of Maintenance Personnel**
1. All the operators or the maintenance personnel involved in refrigerating circuits shall be provided with the effective certificate issued by an industry-accepted assessment institute, to ensure that they are qualified for safety disposal of refrigerant as required in the assessment regulations.
2. The equipment can only be maintained and repaired as per the method recommended by the manufacturer. In case the assistance from personnel of other disciplines is required, the assistance shall be supervised by the personnel with qualification certificate involved in flammable refrigerant.

**Inspection on Maintenance Environment**

- Before operation, the refrigerant leaked in the room is not allowed.
- The area of the room in which maintenance is made shall be in line with this manual.
- Continuous ventilation shall be maintained during maintenance.
- Open fire or high-temperature heat source higher than 548 degree which can easily give birth to open fire is not allowed inside the room within the maintenance area.
- During maintenance, the phones and the radioactive electronics of all the operators inside the room must be powered off.
- One dry powder or carbon dioxide extinguisher shall be equipped inside the maintenance area, and the extinguisher must be under available state.

**Maintenance Site Requirements**

- The maintenance site shall be provided with favorable ventilation and must be flat. Arrangement of the maintenance site inside the basement is not allowed.
- Welding zone and non-welding zone shall be divided at the maintenance site, and shall be clearly marked. A certain safety distance must be guaranteed between the two zones.
- Ventilators shall be installed at the maintenance site, and exhaust fans, fans, ceiling fans, floor fans and dedicated exhaust duct can be arranged, to meet the requirements of ventilation volume and uniform exhaust, and to avoid accumulation of refrigerant gas.
- Leak detection equipment for flammable refrigerant shall be equipped, with relevant management system being established. Whether the leak detection equipment is under available state shall be confirmed before maintenance.
- Sufficient dedicated vacuum pumps of flammable refrigerant and refrigerant charging equipment shall be equipped, with relevant management system for maintenance equipment being established. It shall be guaranteed that the maintenance equipment can only be used for vacuumizing and charging of one type of flammable refrigerant, and mixed usage is not allowed.
- The master power switch shall be arranged outside the maintenance site, with protective (anti-explosive) device being equipped.
- Nitrogen cylinders, acetylene cylinders and oxygen cylinders shall be placed separately. The distance between the gas cylinders above and the working area involved in open fire shall be at least 6m. The anti-backfire valve shall be installed for the acetylene cylinders. The color of the acetylene cylinders and oxygen cylinders installed shall meet the international requirements.
- The warning sign of " No Fire" ,"No Smoking", or"Anti static"shall be arranged inside the maintenance area.
- Fire control device suitable for electric appliance such as the dry powder extinguisher or carbon dioxide extinguisher shall be equipped, and shall always be under the available state.
- The ventilator and other electrical equipment at the maintenance site shall be relatively fixed, with standardized pipe routing. Temporary wires and sockets at the maintenance site are not allowed.

**Leak Detection Methods**

- The environment in which the refrigerant leakage is checked shall be free from potential ignition source. Leak detection with halogen probes (or any other detector with open fire) shall be avoided.
- For the system containing flammable refrigerant, leak detection may be realized with electronic leak detection equipment. During leak detection, the environment in which the leak detection equipment is calibrated shall be free from refrigerant. It shall be guaranteed that the leak detection equipment will not become potential ignition source, and is applicable to the refrigerant to be detected. Leak detection equipment shall be set at a percentage of the LFL of the refrigerant and shall be calibrated to the refrigerant employed, and the appropriate percentage of gas (25 % maximum) is confirmed.
- The fluid used for leak detection shall be applicable to most of the refrigerant. The use of chlorine-containing solvent shall be avoided, to avoid chemical reaction between chlorine and refrigerant and corrosion to copper pipelines.
- In case leakage is suspected, the open fire at the site shall be evacuated or be put out.
- In case welding is required at the leakage position, all the refrigerants shall be recovered, or be isolated at a position far from the leak point with a stop valve. Before and during welding, the whole system shall be purified with OFN.

**Safety Principles**

- The power supply should be cut off before the maintenance.
- During product maintenance, favorable ventilation shall be guaranteed at the maintenance site, and the close of all the doors/windows is not allowed.
- Operation with open fire is not allowed, including welding and smoking. The use of phones is also not allowed. The user shall be informed that cooking with open fire is not allowed.
- During maintenance in a dry season, when the relative humidity is less than 40%, anti-static measures shall be taken, including the wearing of cotton clothes and cotton gloves.
- In case the leakage of flammable refrigerant is identified during maintenance, forced ventilation measures shall be taken immediately, and the source of leak shall be plugged.
- In case the product damaged must be maintained by disassembling the refrigeration system, the product must be delivered to the maintenance point. Welding of refrigerant pipelines at the user's site is not allowed.
- During maintenance, in case re-treatment is required due to lack of fittings, the air conditioner shall be reset.
- The refrigeration system must be safely earthed in the whole course of maintenance.
- For the door-to-door service with refrigerant cylinders, the refrigerant charged inside the cylinder cannot exceed the specified value. The cylinder placed in vehicles or at the installation/maintenance site shall be fixed perpendicularly and be kept away from heat sources, ignition source, source of radiation and electric appliance.

**Maintenance Requirements**

- Before the refrigeration system is operated, the circulating system shall be cleaned with nitrogen. Afterwards, the outdoor unit shall be vacuumized, the duration of which cannot be less than 30 minutes. Finally, 1.5~2.0MPa OFN shall be used for nitrogen flushing (30 seconds~1 minute), to confirm the position requiring treatment. Maintenance of the refrigeration system is only allowed after the residual gas of flammable refrigerant is removed.
- During the use of refrigerant charging tools, cross contamination of different refrigerants shall be avoided. The total length (including the refrigerant pipelines) shall be shortened as much as possible, to reduce the residual of refrigerant inside.
- The cylinders of refrigerant shall be kept upright, and be fixed.
- After maintenance of the refrigeration system, the system shall be sealed with a safe manner.
- The maintenance in progress shall not damage or lower the original class of safety protection of the system.

**Maintenance of Electrical Components**

- Partial of the electrical component under maintenance shall be subject to inspection on refrigerant leakage with dedicated leak detection equipment.
- After the maintenance, the components with safety protection functions cannot be disassembled or removed.
- During the maintenance of sealing elements, before opening the seal cover, the air conditioner shall be powered off first. When power supply is required, continuous leak detection shall be carried out at the most dangerous position, to avoid potential risks.
- During maintenance of electrical components, the replacement of enclosures shall not affect the level of protection.
- After maintenance, it shall be guaranteed that the sealing functions will not be damaged or the sealing materials will not lose the function of preventing the entry of flammable gas due to aging. The substitute components shall meet the recommended requirements of the air conditioner manufacturer.

**Maintenance of Intrinsically Safe Elements**

- The intrinsically safe element refers to the components working continuously inside flammable gas without any risks.
- Before any maintenance, leak detection and inspection on earthing reliability of the air conditioner must be carried out, to ensure no leakage and reliable earthing.
- In case the allowable voltage and current limit may be surpassed during the service of the air conditioner, any inductance or capacitance cannot be added in the circuit.
- Only the elements appointed by the air conditioner manufacturer can be used as the parts and components replaced, or otherwise a fire or explosion may be triggered in case of refrigerant leakage.
- For the maintenance not involved in system pipelines, the system pipelines shall be well protected, to ensure that no leakage will be caused due to maintenance.
- After maintenance and before test run, the air conditioner must be subject to leak detection and inspection on earthing reliability with leak detection equipment or leak detecting solution. It shall be guaranteed that the startup inspection is carried out without leakage and under reliable earthing.

**Removal and Vacuumizing**

- The maintenance or other operations of the refrigeration circuit shall be made as per conventional procedures. Moreover, the flammability of refrigerant shall also be mainly considered. The following procedures shall be followed:
- Refrigerant cleaning;
- Pipeline purification with inert gas;
- Vacuumizing;
- Pipeline purification again with inert gas;
- Pipeline cutting or welding. The refrigerant shall be recovered to a proper cylinder. The system shall be purged with OFN, to ensure safety. The step above may need to be repeated for several times. Compressed air or oxygen cannot be used for purging.
  In the course of purging, OFN shall be charged inside the refrigeration system under vacuum state, to reach the operating pressure. Afterwards, the OFN shall be discharged to the atmosphere. Finally, the system shall be vacuumized. The step above shall be repeated until all the refrigerants in the system are cleared. The OFN charged for the last time shall be discharged to the atmosphere. Afterwards, the system can be welded. The operation above is necessary in case of pipeline welding.
  It shall be guaranteed that no alight fire source is around the outlet of the vacuum pump and the ventilation is favorable.

**Welding**

- Favorable ventilation must be guaranteed in the maintenance area. After the maintenance machine is subject to the vacuumizing above, the system refrigerant can be discharged on the outdoor unit side.
- Before the outdoor unit is welded, it must be guaranteed that no refrigerant is inside the outdoor unit and the system refrigerant has been discharged and cleared.
- The refrigeration pipelines cannot be cut with a welding gun under any circumstance. The refrigeration pipelines must be disassembled with a pipe cutter, and the disassembly must be carried out around a ventilation opening.

**Refrigerant Charging Procedures**

The following requirements are added as the supplementation of conventional procedures:

- During the use of refrigerant charging tools, cross contamination of different refrigerants shall be avoided. The total length (including the refrigerant pipelines) shall be shortened as much as possible, to reduce the residual of refrigerant inside;
- The cylinders of refrigerant shall be kept upright;
- Before refrigerant charging, the refrigeration system shall be earthed;
- A label must be pasted on the refrigeration system after refrigerant charging;
- Excessive charging is not allowed; the refrigerant shall be charged slowly;
- In case system leakage is identified, refrigerant charging is not allowed unless the leak point is repaired;
- During refrigerant charging, the charging amount shall be measured with an electronic scale or a spring scale. The connecting hose between the refrigerant cylinder and the charging equipment shall be relaxed appropriately, to avoid impact on the measuring accuracy due to stress.

Requirements on storage site of refrigerant

- The cylinder of refrigerant shall be placed in a -10~50  environment with favorable ventilation, and warning labels shall be pasted;
- The maintenance tool in contact with the refrigerant shall be stored and used separately, and the maintenance tool of different refrigerants cannot be mixed.

**Scrapping and Recovery**

Scrapping

Before scrapping, the technician shall be completely familiar with the equipment and all its features. The safe recovery of refrigerant is recommended. In case the refrigerant recovered needs to be reused, before which the sample of refrigerant and oil shall be analyzed.

(1) The equipment and operation shall be well known;

(2) Power supply shall be switched off;

(3) The followings shall be guaranteed before scrapping:

The mechanical equipment shall be convenient for operation on the cylinder of refrigerant (if necessary);

All personal protective equipment is available and being used correctly;

The whole course of recovery shall be guided by qualified personnel;

The recovery equipment and cylinders shall be in line with corresponding standards.

(4) The refrigeration system shall be vacuumized if possible;

(5) In case the vacuum state cannot be reached, vacuumizing shall be carried out from numerous positions, to pump the refrigerant in each part of the system out;

(6) It shall be guaranteed that the capacity of cylinders is sufficient before recovery;

(7) The recovery equipment shall be started and operated as per the operation instructions of the manufacturer;

(8) The cylinder cannot be charged too full. (The refrigerant charged cannot exceed 80% of the capacity of cylinders)

(9) The maximum operating pressure of cylinders cannot be surpassed even only lasting for a short term;

(10) After refrigerant recovery is completed, the cylinder and equipment must be evacuated rapidly, and all the stop valves on the equipment must be closed;

(11) Before purification and tests, the refrigerant recovered cannot be charged into another refrigeration system.

Note:

The air conditioner shall be marked (with dates and signature) after being scrapped and the refrigerant is discharged. It shall be guaranteed that the sign on the air conditioner can reflect the flammable refrigerant charged inside.

During maintenance or scrapping, the refrigerant inside the refrigeration system needs to be cleared. It is recommended that the refrigerant be cleared thoroughly.

The refrigerant can only be charged into a dedicated cylinder, the capacity of which shall match with the refrigerant amount charged in the whole refrigeration system. All cylinders to be used are designated for the recovered refrigerant and labeled for that refrigerant (Dedicated Cylinder for Refrigerant Recovery). The cylinders shall be equipped with pressure relief valves and stop valves under favorable state. The empty cylinder shall be vacuumized before usage and be kept under normal temperature.

The recovery equipment shall always be under favorable working state, and be equipped with operation instructions, to facilitate information search. The recovery equipment shall be applicable to the recovery of flammable refrigerant. Moreover, weighing apparatus under available state with measurement certificates shall be equipped. In addition, removable attachment joints free from leakage shall be used as the hose, and shall always be under favorable state. Whether the recovery equipment is under favorable state and is properly maintained and whether all the electrical components are sealed shall be checked before usage, to avoid fire or explosion in case of refrigerant leakage. If you have any question, please consult the manufacturer.

The refrigerant recovered shall be delivered back to the manufacturer in appropriate cylinders, with transporting instructions being attached. Mixing of refrigerant in recovery equipment (especially the cylinders) is not allowed.

During transporting, the space in which the flammable refrigerant air conditioners are loaded cannot be sealed. Anti-static measures shall be taken for the transporting vehicles. Meanwhile, during the transporting, loading and unloading of air conditioners, necessary protective measures shall be taken, to protect the air conditioner from being damaged.

During removal of the compressor or clearing of the compressor oil, it shall be guaranteed that the compressor is vacuumized to a proper level, to ensure no residual flammable refrigerant is left inside the lubricating oil. The vacuumizing shall be completed before the compressor is delivered back to the manufacturer. The vacuumizing can only be accelerated by heating the compressor housing through electrical heating. Safety shall be guaranteed when the oil is discharged from the system.disassembled with a pipe cutter, and the disassembly must be carried out around a ventilation opening

Carefully read the following information in order to operate the air conditioner correctly.
Below are listed three kinds of Safety Precautions and Suggestions.
⚠WARNING Incorrect operations may result in severe consequences of death or serious injuries.
⚠CAUTION Incorrect operations may result in injuries or machine damages; in some cases may cause serious consequences.
INSTRUCTIONS: These information can ensure the correct operation of the machine.
The following safety symbols are used throughout this manual:
⃠ : Indicates an action that must be avoided.
❗ : Indicates that important instructions must be followed.
⏚ : Indicates a part which must be grounded.
ϟ : Beware of electric shock (This symbol is displayed on the main unit label.)
After completing installation, test the unit to check for installation errors. Give the user adequate instructions concerning the use and cleaning of the unit according to the Operation Manual.

Be sure to conform with the following important Safety Precautions.

<table>
<tr><th colspan="2">⚠WARNING</th></tr>
<tr><td>• If any abnormal phenomena is found (e. g.smell of firing), please open the window and well ventilated the room immediately, then cut off the power supply immediately, and contact the dealer to find out the handling method.<br>In such case, to continue using the conditioner will damage the conditioner, and may cause electrical shock, fire, or explosion hazard.<br> 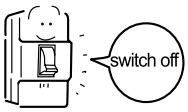 </td><td>• Don't dismantle the outlet of the outdoor unit.<br>The exposure of fan is very dangerous which may harm human beings.<br> </td></tr>
<tr><td>• After a long time use of air-conditioner, the base should be checked for any damages.<br>If the damaged base is not repaired, the unit may fall down and cause accidents.<br> </td><td>• When need maintenance and repairment, call dealer to handle it.<br>Incorrect maintenance and repairment may cause water leak, electrical shock, fire, and explosion hazard.<br> 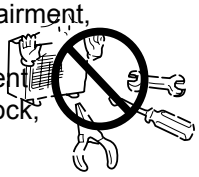 </td></tr>
<tr><td>• No goods or nobody is permitted to placed on or stand on outdoor unit.The falling of goods and people may cause accidents.<br> </td><td rowspan="3">• Air-conditioner can't be installed in the environment with inflammable gases because the inflammable gases near air-conditioner may cause fire and explosion hazard.<br>Please let the dealer be responsible for installing the conditioner. Incorrect installation may cause water leak, electrical shock, fire, and explosion hazard.<br>• Call the dealer to take measures to prevent the refrigerant from leaking.<br>If conditioner is installed in a small room, be sure to take every measure in order to prevent suffocation and explosion accident even in case of refrigerant leakage.<br>• When conditioner is installed or reinstalled, the dealer should be responsible for them.<br>Incorrect installation may cause water leaking, electrical shock, fire, and explosion hazard.</td></tr>
<tr><td>• Don't operate the air-conditioner with damp hands.Otherwise it will be shocked.<br> </td></tr>
<tr><td>• Only use correctly-typed fuse.<br>May not use wire or any other materials replacing fuse, otherwise it may cause faults or fire accidents.<br> </td></tr>
<tr><td>• Use drain pipe correctly to ensure efficient drainage.<br>Incorrect pipe use may cause water leaking.</td><td>• Connect earthing wire.<br>Earthing wire should not be connected to the gas pipe, water pipe, lightning rod or phone line, incorrect earthing may cause shock.<br> <br>• Installed explosion-proof electrical-leaking circuit breaker.<br>It easily cause electrical shock without circuit breaker.</td></tr>
<tr><td>• Have the unit professionally installed.<br>Improper installation by an unqualified person may result in water leak, electric shock, fire, or explosion.</td><td>• Be sure to carefully follow each step in this handbook when installing the unit.<br>Improper installation may result in water leak, electric shock, smoke or fire.</td></tr>
</table>

<table>
<tr><th colspan="2">⚠WARNING</th></tr>
<tr><td>• Place the unit on a stable, level surface that withstands the weight of the unit to prevent the unit from tipping over or falling causing injury as a result.</td><td>• Be sure to carefully follow each step in this handbook when installing the unit.<br>Improper installation may result in water leak, electric shock, smoke or fire.</td></tr>
<tr><td>• Only use specified cables for wiring. Securely connect each cable, and make sure that the cables are not straining the terminals.<br>Cables not connected securely and properly may generate heat and cause fire and explosion.</td><td rowspan="2">• Have all electrical work performed by a licensed electrician according to the local regulations and the instructions given in this manual. Secure a circuit designated exclusively to the unit.<br>Improper installation or a lack of circuit capacity may cause the unit to malfunction or present a risk of electric shock, smoke,and fire.</td></tr>
<tr><td>• Take necessary safety measures against typhoons and earthquakes to prevent the unit from falling over.</td></tr>
<tr><td>• Do not make any changes or modifications to the unit. In case of problems, consult the dealer.<br>If repairs are not made properly, the unit may leak water and present a risk of electric shock, or it may produce smoke or cause fire and explosion.</td><td>• Securely attach the terminal cover(panel) on the unit.<br>If installed improperly, dust and/or water may enter the unit and present a risk of electric shock, smoke, fire, or explosion.</td></tr>
<tr><td>• Do not touch the fins on the heat exchanger with bare hands, for they are sharp and dangerous.</td><td>• Only use refrigerant R32 as indicated on the unit when installing or relocating the unit.<br>The use of any other refrigerant or an introduction of air into the unit circuit may cause the unit to run an abnormal cycle and abnormal cycle and cause the unit to burst.</td></tr>
<tr><td>• In the event of a refrigerant gas leak, provide adequate ventilation to the room.<br>If leaked refrigerant gas is exposed to a heat source, noxious gases, fire or explosion will be caused.</td><td>• When installing the unit in a small room, safeguard against hypoxia that results from leaked refrigerant reaching the threshold level.<br>Consult the dealer for necessary measures to take.</td></tr>
<tr><td>• Do not try to defeat the safety features of the devices, and do not change the settings.<br>Defeating the safety features on the unit such as the pressure switch and temperature switch or using parts other than the dealer or specialist may result in fire or explosion.</td><td>• When relocating the air conditioner, consult the dealer or a specialist.<br>Improper installation may result in water leak, electric shock, or fire.</td></tr>
<tr><td>• Only use specified parts.<br>Have the unit professionally installed. Improper installation may cause water leak, electric shock,smoke, fire, explosion.</td><td>• After completing the service work, check for a refrigerant gas leak.<br>If leaked gas refrigerant is exposed to a heat source such as fan heater,stove,and electric grill, noxious gases may form.</td></tr>
</table>

Precautions for Handling Units for Use with R32

<table>
<tr><th colspan="2">⚠CAUTION</th></tr>
<tr><td>Do not use the existing refrigerant piping<br>• The old refrigerant and refrigerator oil in the existing piping contain a large amount of chlorine, which will cause the refrigerator oil in the new unit to deteriorate.<br>• R32 is a high-pressure refrigerant, and the use of the existing piping may result in bursting.</td><td>Use a vacuum pump with a reverse-flow check valve.<br>• If other types of valves are used, the vacuum pump oil will flow back into the refrigerant cycle and cause the refrigerator oil to deteriorate.</td></tr>
<tr><td>Keep the inner and outer surfaces of the pipes clean and free of contaminants such as sulfur, oxides, dust/dirt shaving particles,oils,and moisture.<br>• Contaminants inside the refrigerant piping will cause the refrigerant oil to deteriorate.</td><td rowspan="2">Do not use the following tools that have been used with the conventional refrigerants. Prepare tools that are for exclusive use with R32.<br>(Gauge manifold, charging hose, gas leak detector, reverse-flow check valve, refrigerant charge base,vacuum gauge, and refrigerant recovery equipment.)<br>• If refrigerant and/or refrigerant oil left on these tools are mixed in with R32, or if water is mixed with R32, it will cause the refrigerant to deteriorate.<br>• Since R32 does not contain chlorine, gas-leak detectors for conventional refrigerators will not work.</td></tr>
<tr><td>Store the piping to be used during installation indoors, and keep both ends of the piping sealed until immediately before brazing.(keep elbows and other joints wrapped in plastic.)<br>• If dust, dirt, or water enters the refrigerant cycle, it may cause the oil in the unit to deteriorate or may cause the compressor to malfunction.</td></tr>
<tr><td></td><td>Do not use a charging cylinder.<br>• The use of charging cylinder will change the composition of the refrigerant and lead to power loss.</td></tr>
<tr><td>Use a small amount of ester oil, ether oil, or alkylbenzene to coat flares and flange connections.<br>• A large amount of mineral oil will cause the refrigerating machine oil to deteriorate.</td><td>Exercise special care when handling the tools.<br>• An introduction of foreign objects such as dust, dirt or water into the refrigerant cycle will cause the refrigerating machine oil to deteriorate.</td></tr>
<tr><td>Use liquid refrigerant to charge the system.<br>• Charge the unit with gas refrigerant will cause the refrigerant in the cylinder to change its composition and will lead to a drop in performance</td><td>Only use R32 refrigerant.<br>• The use of refrigerants containing chlorine(i.e. R22) will cause the refrigerant to deteriorate.</td></tr>
</table>

Before Installing the Unit

<table>
<tr><th colspan="2">⚠CAUTION</th></tr>
<tr><td>Do not install the unit in a place where there is a possibility of flammable gas leak.<br>• Leaked gas accumulated around the unit may start a fire or explosion.</td><td rowspan="2">When installing the unit in a hospital, take necessary measures against noise.<br>• High-frequency medical equipment may interfere with the normal operation of the air conditioning unit or the air conditioning unit may interfere with the normal operation of the medical equipment</td></tr>
<tr><td>Do not use the unit to preserve food, animals, plants, artifacts, or for other special purposes.<br>• The unit is not designed to provide adepuate conditions to preserve the quality of these items.</td></tr>
<tr><td>Do not use the unit in an unusual environment<br>• The use of the unit in the presence of a large amount of oil, steam, acid, alkaline solvents or special types of sprays may lead to a remarkable drop in performance and/or malfunction and presents a risk of electric shock, smoke, fire, or explosion.<br>• The presence of organic solvents, corroded gas (such as ammonia,sulfur compounds,and acid may cause gas or water leak.)</td><td>Do not place the unit on or over things that may not get wet.<br>• When humidity level exceeds 80% or when the drainage system is clogged, indoor units may drip water.<br>• Installation of a centralized drainage system for the outdoor unit may also need to be considered to prevent water drips from the outdoor units.</td></tr>
</table>

Before Installing (Relocating) the Unit or Performing Electric Work

| ⚠CAUTION | |
|---|---|
| Ground the unit.<br>• Do not connect the grounding on the unit to gas pipes,water pipes, lightning rods, or the grounding terminals of telephones. Improper grounding presents a risk of electric shock, smoke, fire, explosion, or the noise caused by improper grounding may cause the unit to malfunction. | Do not spray water on the air conditioners or immerse the air conditioners in water.<br>• Water on the unit presents a risk of electric shock. |
| Make sure the wires are not subject to tension.<br>• If the wires are too taut, they may break or generate heat and/or smoke and cause fire or explosion. | Periodically check the platform on which is placed for damage to prevent the unit from falling.<br>• If the unit is left on a damaged plarform, it may topple over, causing injury. |
| Install a breaker for current leakage at the power source to avoid the risk of electric shock.<br>• Without a breaker for current leakage, there is a risk of electric shock, smoke or fire. | When installing draining pipes, follow the instructions in the manual, and make sure that they properly drain water so as to avoid dew condensation.<br>• If not installed properly, they may cause water leaks and damage the furnishings. |
| Use breakers and fuses (electrical current breaker, remote switch<switch+Type-B fuse>,molded case circuit breaker) with a proper current capacity.<br>• The use of large-capacity fuses, steel wire, or copper wire may damage the unit or cause smoke or fire. | Properly dispose of the packing materials.<br>• Things such as nails may be included in the package. Dispose of them properly to prevent injury.<br>• Plastic bags present a choking hazard to children. Tear up the plastic bags before disposing of them to prevent accidents. |

Before the Test Run

| ⚠CAUTION | |
|---|---|
| Do not operate switches with wet hands to avoid electric shock.<br>Do not touch the refrigerant pipes with bare hands during and immediately after operation.<br>• Depending on the state of the refrigerant in the system, certain parts of the unit such as the pipes and compressor may become very cold or hot and may subject the person to frost bites or burning. | Do not turn off the power immediately after stopping the unit.<br>• Allow for at least five minutes before turning off the unit, otherwise the unit may leak water or experience other problems. |
| Do not operated the unit without panels and safety guards in their proper places.<br>• They are there to keep the users from injury for accidentally touching rotating, high-tempreture or high-voltage parts. | Do not operate the unit without air filters.<br>• Dust particles in the air may clog the system and cause malfunction. |

## 14.2 Introduction

### General information

Important note: Please, check, according to the model name, which is your heat pump type, how it is abbreviated and
referred to in this instruction manual. This Installation and Operation Manual is only related to
AU082/112/162FYCRA(HW)
outdoor Units.
A range of air/water reversible heat pumps with inverter technology. The mono-phase versions are available with AU082/112/162FYCRA(HW) models to fulfil central heating and cooling requirements for homes, offices, shops, etc...;
These appliances are distinguished for their high energy efficiency and contained sound levels. They can be used as a single generator to assist the system, but also inside an integrated system (for example, with a heat pump - boiler - solar heating). They are engineering solutions that can be perfectly integrated with each other, which allow to attain maximum benefit from the various energy production systems on the basis of the respective efficiency parameters.
For the entire system to operate correctly, HAIER offers an "intelligent" system Manager capable of identifying the most economical energy source at a given time and therefore choose the right appliance to activate.
All series models are equipped with a system side plate heat exchanger and low energy consumption circulation pump, which facilitate installation. The maximum flow temperature set-point with central heating is 55°C, which enables use of radiator systems as well as fan coil or radiant systems.The entire range complies with the requirements of ErP Directive (2009/125/EC) and ELD (2010/30/EC). Various hydraulic,electric and electronic kits are available, which enable flexible use in all circumstances 8kW,11kW and 16kW mono-phase inverter air/water heat pumps for winter and summer air conditioning. The tube in 8kW and the shell-tube in 11 and 16 kW..

### Combination and options

Digital I/O PCB kit (option),type is ATW-A01
An optional I/O PCB can be connected to the 3indoor unit and allows:
remote alarm output
heating/cooling ON/OFF outputbivalent operation (permission signal for the auxiliary boiler)
Refer to the operation manual and to the installation manual of the digital I/O PCB for more information.
Refer to the wiring diagram or connection diagram for connecting this PCB to the unit.

### Accessories

| No. | Drawing | Name of parts | Quantity |
|---|---|---|---|
| 1 | | Drainage elbow | 3 |
| 2 | | Rubber cushion | 4 |

### Move and scrap the air conditioning

- When moving, to disassemble and re-install the air conditioning, please contact your dealer for technical support.
- In the composition material of air conditioning, the content of lead, mercury, hexavalent chromium, polybrominated biphenyls and polybrominated diphenyl ethers are not more than 0.1% (mass fraction) and cadmium is not more than 0.01% (mass fraction).
- Please recycle the refrigerant before scrapping, moving, setting and repairing the air conditioning; for the air conditioning scrapping, should be dealt with by the qualified enterprises.

## 14.3 Transportation and lifting

### Lifting

In front of the unit shipped from unpacking location as close as possible.

| ⚠CAUTION |
| --- |
| •Do not place anything on the device.<br>•Two ropes shall be used for lifting the outdoor unit. |

**Hoisting method**

Hoisting to ensure that the level of outdoor machine, slowly lifting.

1.Removal of outer packing is strictly prohibited

2.As shown by two ropes hoist with outdoor machine packaging.

| ⚠CAUTION |
| --- |
| •In order to ensure safety, maintain the level of lifting, slowly lifting.<br>•Do not lift the elevator to the packing and outer packing of the equipment.<br>•External protection should be used when lifting, such as cloth or cardboard. |

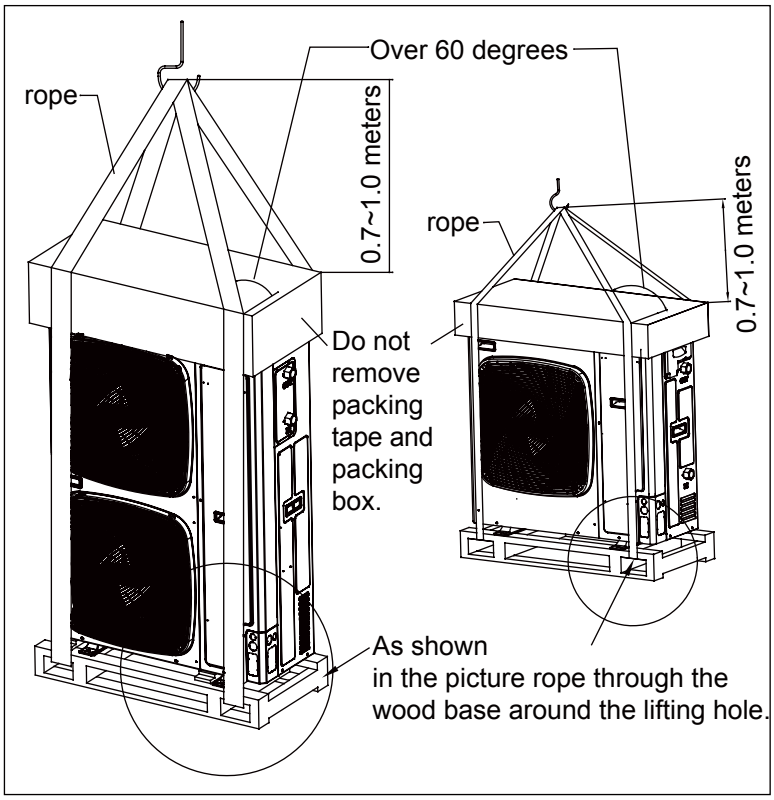


### Manual handling

| ⚠CAUTION |
| --- |
| •In the installation and commissioning, the outdoor machine do not put any irrelevant material, to ensure that there is no debris inside the machine, or there may be a fire or accident. |

Pay attention to the following points when handling the equipment manually:

1.No demolition wood base.

2.In order to prevent the dumping of the outdoor machine, the center of gravity of the unit should be noted as shown in the figure.

3.Two or more people to carry out the outdoor machine.

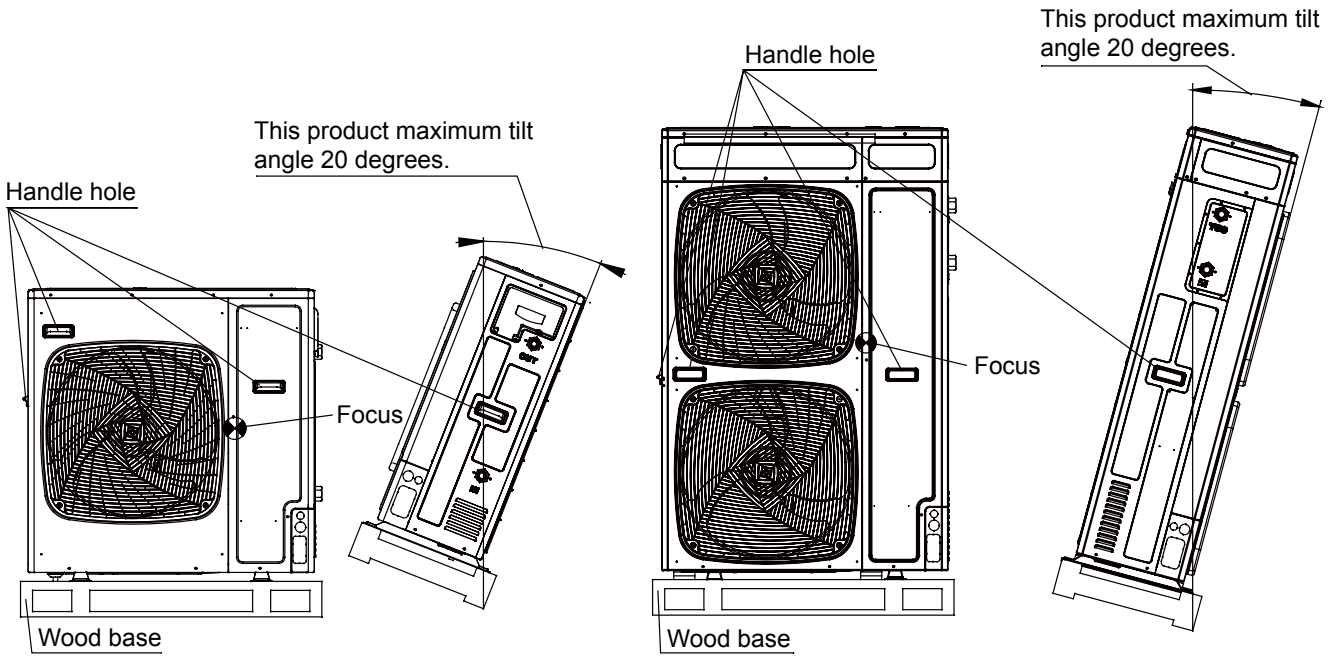

## 14.4 Installation instruction

### (1) Installation place selection

<table>
<tr>
<td>Air-conditioner can't be installed in the place with inflammable gas. Or it will cause fire hazard.<br> 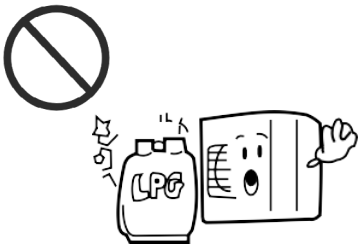 <br></td>
<td>The unit should be installed at the place with good ventilation. No obstacle at the air inlet/outlet. And no strong wind blows the unit.<br> 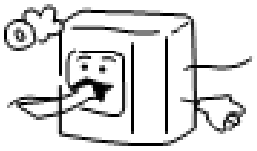 <br>The installation space refers to the latter info.</td>
<td>The unit should be installed at the strong enough place. Or it will cause vibration and noise.<br> 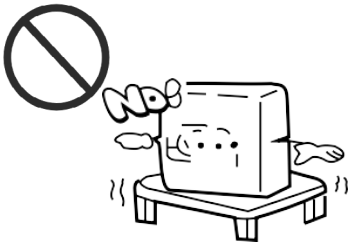 </td>
</tr>
<tr>
<td>The unit should be installed at the place where the cold/hot air or noise will not interfere the neighbours.<br> </td>
<td>•The place where the water can flow fluently.<br>•The place where no other heat source will affect the unit.<br>•Pay attention to the snow against clogging the outdoor.<br>•In installation, install the anti-vibration rubber between the unit and the bracket.</td>
<td>•The unit is better not be installed at the below places, or it will cause damage.<br>•The place where there is corrosive gas (spa area etc).<br>•The place blowing salty air (seaside etc).<br>•Exsits the strong coal smoke.<br>•The place with high humidity.<br>•The place where there is device emitting Hertzian waves.<br>•The place where voltage changes greatly</td>
</tr>
</table>

Note:
1.In snowy area, install the unit under the bracket or the snow-proof cover against the accumulative snow on the unit.
2.Do not install the unit at the place where the flammable gas will leak.
3.Install the unit at the strong enough place.
4.Install the unit at the flat place.
5.When being installed at the place with strong wind, set the air outlet of the unit and the wind direction vertical.
6.The installation site should be far away from the place where the noise is higher. At the same time for the noise of higher places should ensure that the outdoor machine vibration and wall insulation measures to prevent vibration caused by thin wall or acoustic noise problems.
7.Aluminum foil fin is very sharp, pay attention to prevent scratches.
8.In addition to the maintenance of the roof, or the installation of outdoor machines, other people can not contact the outdoor machine.

## (2)Installation and maintenance space

Selection of installation location of outdoor

(1)Single-unit installation (unit: in.(mm))

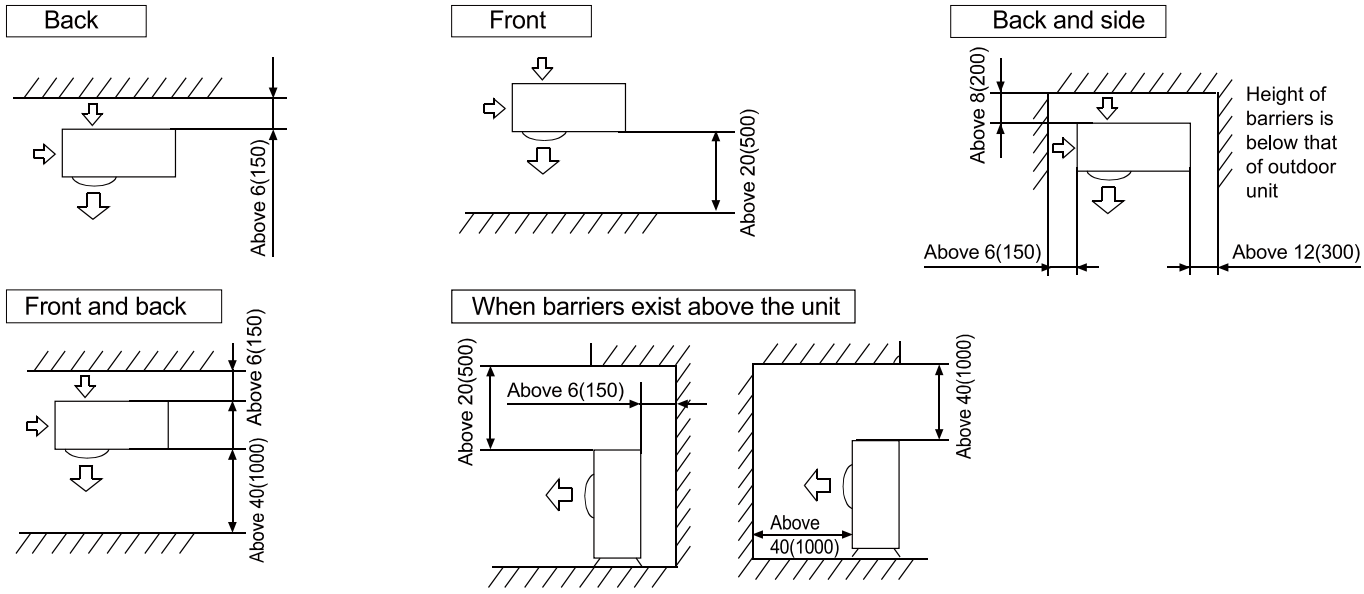


The top and two side surfaces must be exposed to open space, and barriers on at least one side of the front and back shall be lower than the outdoor unit.

(2)Multi-unit installation (unit: in.(mm))

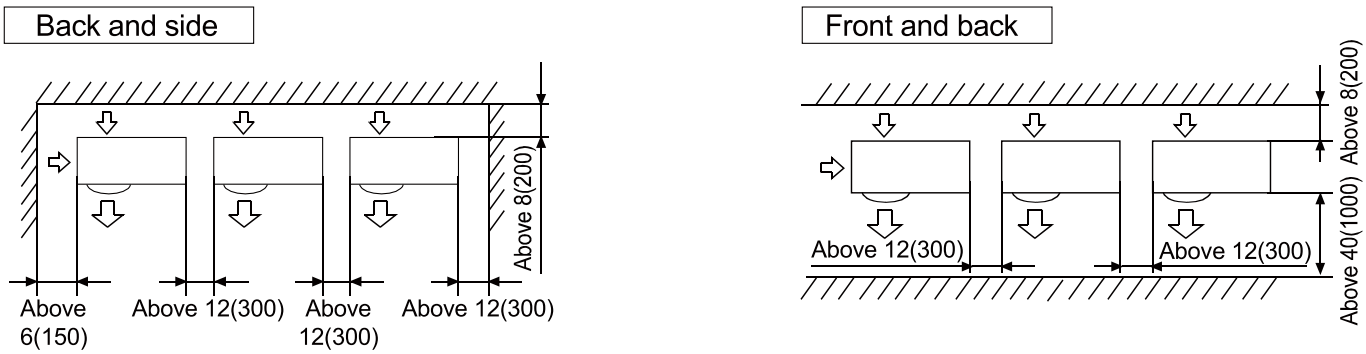


(3)Multi-unit installation in front and back (unit: in.(mm))

Standard

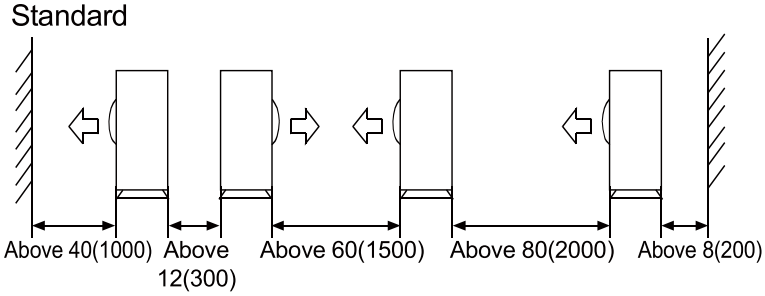


The top and two side surfaces must be exposed to open space, and barriers on at least one side of the front and back shall be lower than the outdoor unit.

•The installation service spaces shown in the illustrations are based on an air intake temperature of 95°F(35°C)(DB) for COOL operation. In regions where the air intake temperature regularly exceeds 95°F(35°C)(DB), or if the heat load of outdoor units is expected to regularly exceed the maximum operating capacity, reserve a larger space than that indicated at the air intake side of units.

•Regarding the required air outlet space, position the units with consideration to the space required for the onsite refrigerant piping work as well. Consult your dealer if the work conditions do not match those in the drawings.

## (3)Precautions on installation

NOTICE
If drain holes of the outdoor unit are covered by a mounting base or by floor surface, raise the unit in order to provide a free space of more than 5in.(130mm) under the outdoor unit.

Selection of installation location of outdoor
(1)Single-unit installation (unit: in.(mm))

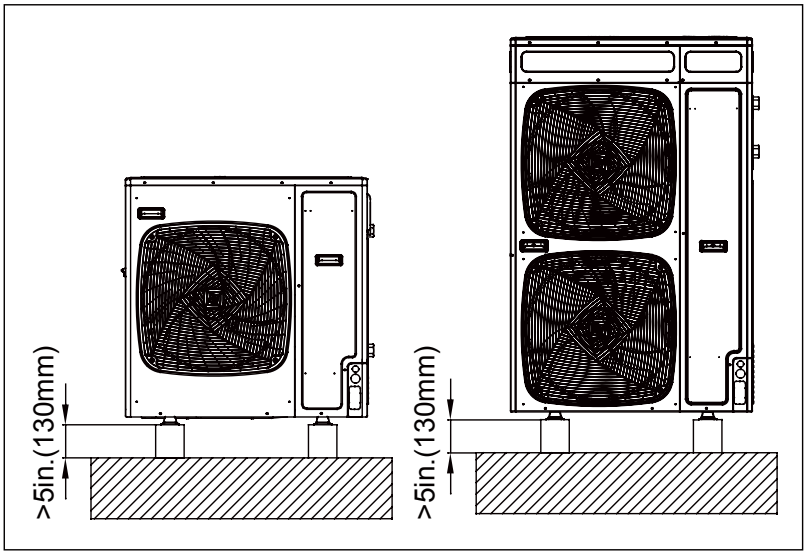


Foundation work
•Check the strength and level of the installation ground so that the unit will not cause any operating vibration or noise after installation.
•In accordance with the foundation drawing in the figure, fix the unit securely by means of the foundation bolts.
•It is best to screw in the foundation bolts until their length are 0.8in.(20mm) from the foundation surface.
•Fix the outdoor unit to the foundation bolts using nuts with resin washers(1) as shown in the figure.
•If there is no need to install the outdoor machine in the open space of the building or the enclosure, the following two ways can be used to avoid the fan reversal or damage caused by strong wind blowing.

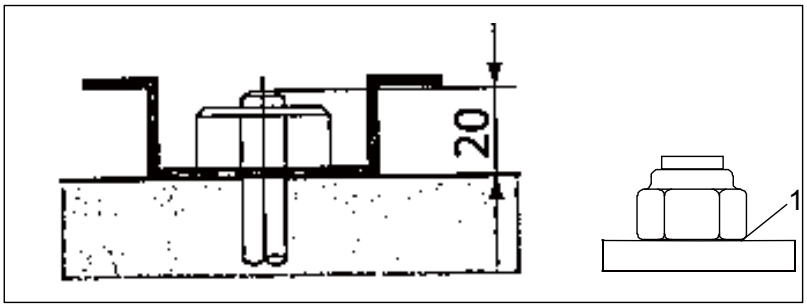


(1) Using the windshield

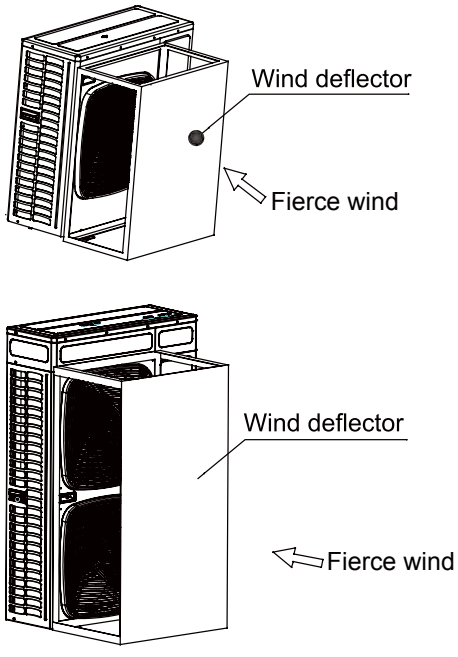


(2) Near wall installation

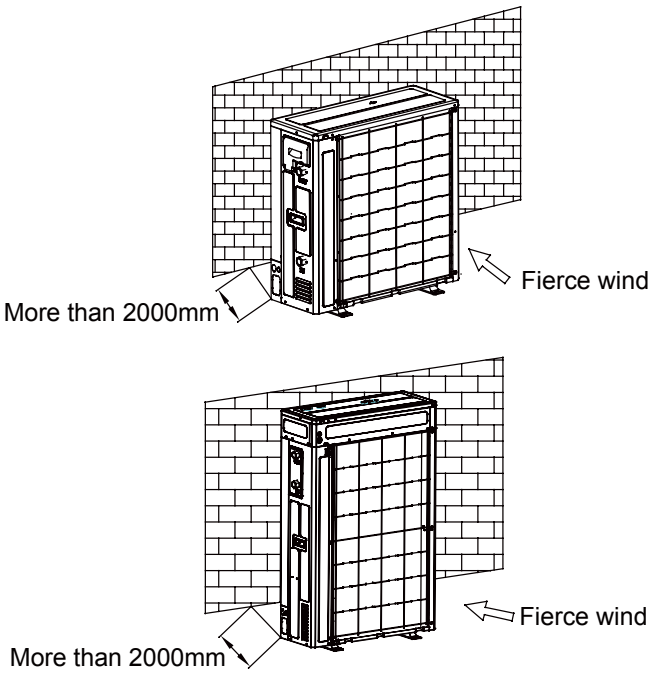

If the coating on the fastening area is stripped off, the nuts rust easily.
Dimensions (bottom view) (unit of measurement: mm)

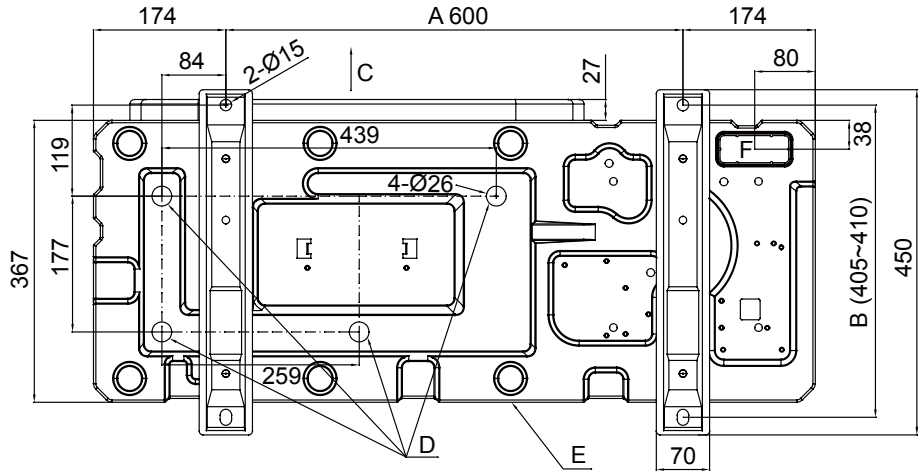


A leg pitch1
B leg pitch2
C Front grill (air outlet side)
D Drain hole
E Bottom frame
F Knock-out hole (for piping line)

## (4)Drain work of the outdoor unit

In case drain work on your outdoor unit is neccessary, follow the guidelines below.
•Two drain outlets are provided in the bottom plate of unit (drain plug and drain hose are field supply).
• In cold areas, do not use a drain hose with the unit. Otherwise,drain water may freeze and block the drain. In case the use of a drain hose is unavoidable for one reason or another, it is recommended to install a heater tape in order to protect drain from freezing.
•Make sure the drain works properly.
NOTICE
If drain holes of the outdoor unit are covered by a mounting base or by floor surface, raise the unit in order to provide a free space of more than 100 mm under the outdoor unit.

## (5)Requirements and recommendations for the hydraulic circuit

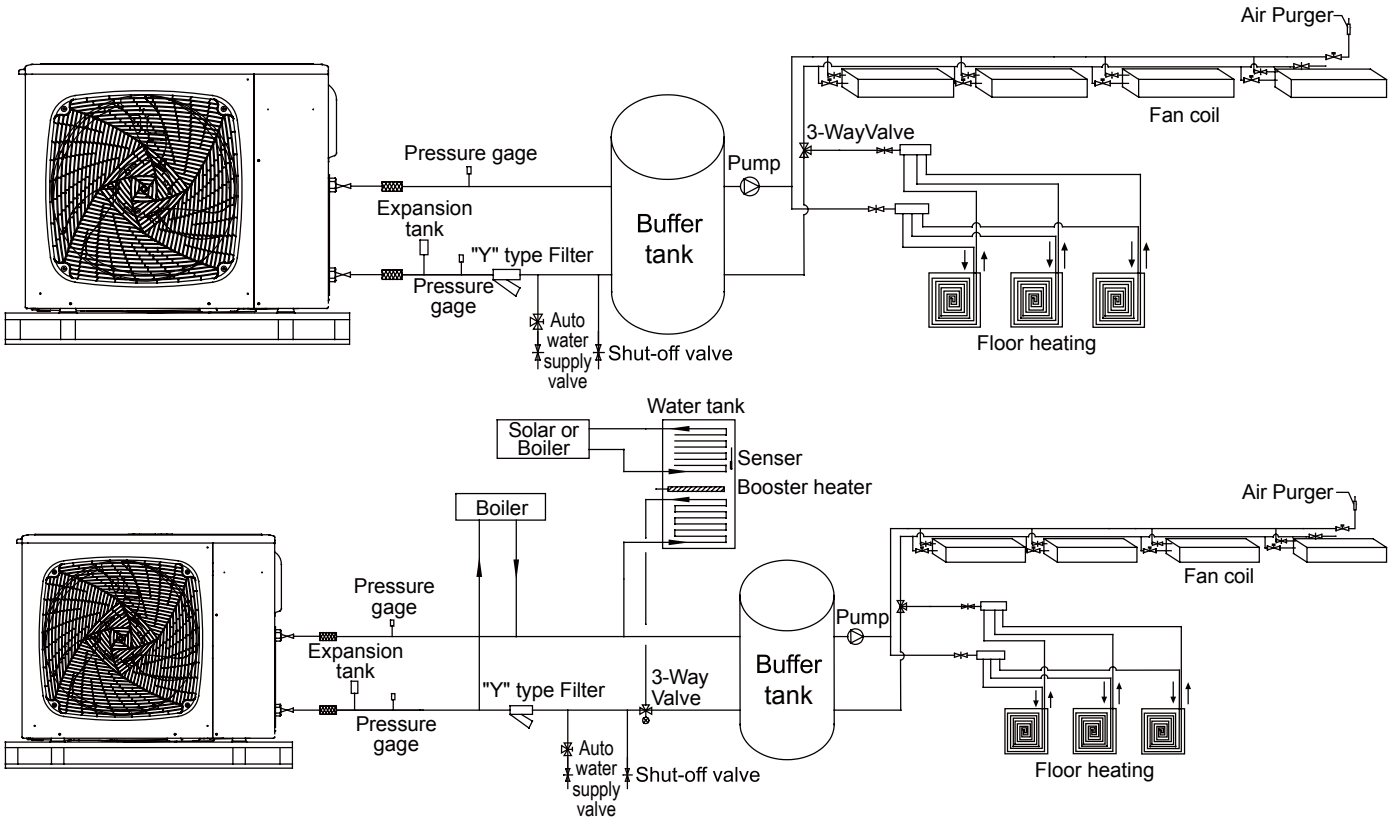

**Hydraulic circuit**

The maximum piping length depends on the maximum pressure availability in the water outlet pipe. Please check the pump curves.

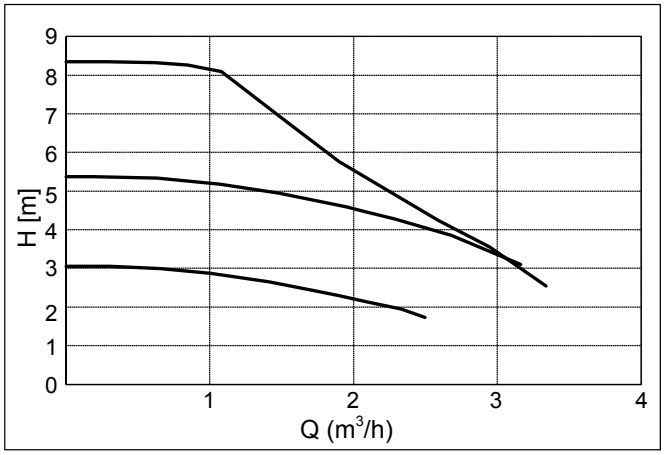


AU082FYCRA(HW)

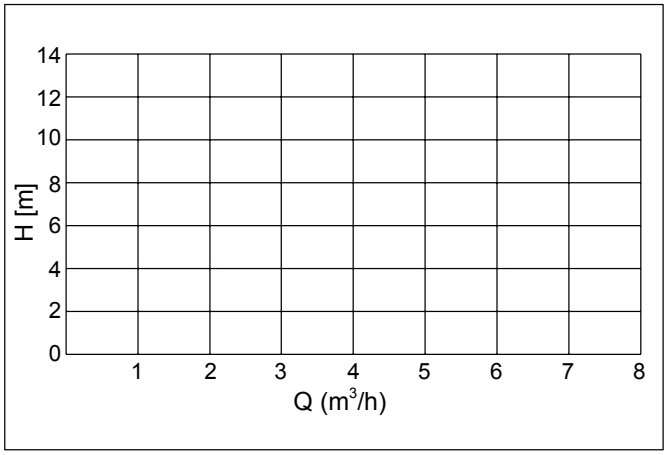


AU112FYCRA(HW)
AU162FYCRA(HW)

**Air purging**

•The hydraulic system should be equipped with an air purger at the highest location of the system. If this location is not the highest of the water installation, air might be trapped inside the water pipes, which could cause system malfunction. In that case additional air purgers (field supplied) should be installed to ensure no air enters the water circuit. It should be installed as below:

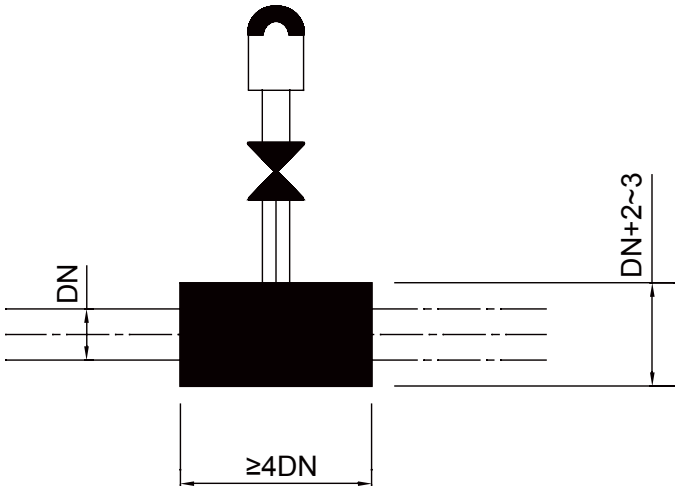


•For heating floor system, the air should be purged by means of an external pump and an open circuit to avoid air bags.

**Anti- freezing**

•When the unit is stopped during shut-off periods and the ambient temperature is very low, the water inside the pipes and the circulating pump may freeze, thus damaging the pipes and the water pump. In these cases, the installer shall ensure that the water temperature inside the pipes does not fall below the freezing point. In order to prevent this, the unit has a self-protection mechanism which should be activated
•Additionally, in cases where water drainage is difficult, an anti freeze mixture of glycol (ethylene or propylene) should be used (content between 10% to 40%). The performance of the unit working with glycol may decrease in proportion to the percentage of glycol used, since the density of glycol is higher than that of the water.

**Minimum flow rate**

•Check that the water pump of the space heating circuit works within the pump operating range and that the water flow is over the pump's minimum. If the water flow is below 12 litres/minute (6 litres/minute for AU082 unit), alarm is displayed on the unit.

**Filter**

•An additional special water filter is highly recommended to be installed on the space heating (field installation), in order to remove possible particles remaining from brazing which cannot be removed by the unit water strainer. Water filter need to be bought and installed by installer. Number of water filter meshes is not less than 40.

**Expansion tank**

•The internal air pressure of the expansion vessel tank will be adapted to the water volume of the final installation,there is not expansion tank in the ODU,it should be buy and installed by installer.The Volume of the expansion tank is according to the whole system.

**DHW Tank**

•When selecting a tank for DHW operation, take into consideration the following points:
The storage capacity of the tank has to meet with the daily consumption in order to avoid stagnation of water.
Fresh water must circulate inside the DHW tank water circuit at least one time per day during the first days after the installation has been performed. Additionally, flush the system with fresh water when there is no consumption of DHW during long periods of time.

**Heat loss**

•Try to avoid long runs of water piping between the tank and the ODU installation in order to decrease possible temperature losses.
•When necessary, put insulation on the pipes in order to avoid heat losses. The thickness of insulation is not less than 30mm.

**Piping**

• The maximum water pressure is 5 bar (nominal opening pressure of the safety valve). Provide adequate reduction pressure device in the water circuit to ensure that the maximum pressure is NOT exceeded.
•Make sure that all field supplied components installed in the piping circuit can withstand the water pressure and the water temperature range in which the unit can operate.
•HAIER units are conceived for exclusive use in a closed water circuit.

**Minimum water volume description**

The following part shows how to calculate the minimum water volume in the system for product protection (anti-hunting) and temperature drop at defrosting.
1 Protective water volume for product
Ensure that the water volume is equal or greater than those shown below, in order to lower ON/OFF frequency of HAIER unit at no load or extreme light load. When water volume is less than the volume indicated
(minimum water volume), compressor operation frequently stops at light load, which should result in shorter life or failure.

| Mode | AU082FYCRA(HW) | AU112FYCRA(HW) | AU162FYCRA(HW) |
|---|---|---|---|
| Minimum water volume(L) | 40 | 55 | 80 |

**Water control**

It is necessary to analyse the quality of water by checking pH, electrical conductivity, ammonia ion content, sulphur content, and others. The following is the recommended standard water quality.

| Item | Chilled Water System | | Tendency | |
|---|---|---|---|---|
| | Circulating Water (20°C Less than) | Supply Water | Corrosion | Deposits of Scales |
| Standard Quality pH(25°C) | 6.8~8.0 | 6.8~8.0 | ● | ● |
| Electrical Conductivity(ms/m) (25°C) (μS/cm) (25°C) {2} | Less than 40 Less than 400 | Less than 43 Less than 400 | ● | ● |
| Chlorine Ion (mg $CL^{-}$/l) | Less than 50 | Less than 50 | ● | |
| Sulphur Acid Ion (mg $SO^{-}$/l) | Less than 50 | Less than 50 | ● | |
| The Amount of Acid Consumption (pH4.8)(mg CaCO3/l) | Less than 50 | Less than 50 | | ● |
| Total Hardness(mg CaCO3/l) | Less than 70 | Less than 70 | | ● |
| Calcium Hardness(mg CaCO3/l) | Less than 50 | Less than 50 | | ● |
| Silica L(mg $SO^{-}$/l) | Less than 30 | Less than 30 | | ● |
| Reference Quality Total iron(mg Fe/l) | Less than 1.0 | Less than 0.3 | ● | ● |
| Total Copper(mg Cu/l) | Less than 1.0 | Less than 0.1 | ● | |
| Sulphur Ion(mg S2-/l) | It shall not be detected | | ● | |
| Ammonium Ion(mg NH4-/l) | Less than 1.0 | Less than 0.1 | ● | |
| Remaining Chlorine(mg Cl/l) | Less than 0.3 | Less than 0.3 | ● | |
| Floating Carbonic Acid (mg CO2/l) | Less than4.0 | Less than4.0 | ● | |
| Index of Stability | 6.8~8.0 | - | ● | ● |

NOTE
•The mark “” in the table means the factor concerned with the tendency of corrosion or deposits of scales.
•The value showed in “{}” are for reference only according to the former unit.

## 14.5 Electric wiring and the application

**General check**

•Make sure that the following conditions related to power supply installation are satisfied:The power capacity of the electrical installation is large enough to support the power demand of the HAIER system.
The power supply voltage is within ±10% of the rated voltage.
The impedance of the power supply line is low enough to avoid any voltage drop of more than 15% of the rated voltage.
•Following the Council Directive 2004/108/EC, relating to electromagnetic compatibility, the table below indicates the Maximum permitted system impedance Zmax at the interface point of the user's supply, in accordance with EN61000 3 11.

| Model | Power supply | ZMax.(Ω) |
|---|---|---|
| AU082FYCRA(HW) | 1~ 230V 50Hz | 0.35 |
| AU112FYCRA(HW) | | 0.24 |
| AU162FYCRA(HW) | | 0.24 |

| ⚠WARNING |
|---|
| •Switch off the main power switch of the indoor and outdoor machine for more than 1 minutes before the wiring or regular inspection.<br>•To prevent the destruction of wires and electrical components by rats or other animals. Serious, it may lead to the occurrence of fire.<br>•To avoid damage to the wire, avoid contact with refrigerant pipes, steel edges and electrical components. Serious, it may lead to the occurrence of fire. |

| ⚠CAUTION |
|---|
| •Secure the power cord with a wire tie in the machine. |

Note:
When the wiring of the outdoor machine is not using the wire, it should be fixed with the rubber ring

| ⚠CAUTION |
|---|
| •In the case of 3 phase 5 wire type, the power supply of the indoor machine must be connected use L1 line and N line, prohibit the use of L1-L2, L1-L3, Otherwise the electrical part will be damaged. |

**Inspect**

•To ensure that the electrical equipment used on the installation site (main power switch, circuit breaker, wire, conduit and wiring terminals, etc.) have been selected according to current data, to ensure that the device in line with national standards.
•Check the power supply voltage in the range of 10% of the rated voltage and the ground wire is included in the power supply line. Otherwise, electrical parts will be damaged.
• .Check whether the power supply is satisfied. Otherwise, the compressor will not start when the voltage is too low.
•By measuring the insulation resistance between the ground and the electrical device terminals, to ensure that more than 1 MΩ. Otherwise, the system can not be started until the cause of leakage and maintenance.

**Connection**

•Connect the power cord to the terminal of the indoor unit and the outdoor mechanical and electrical gas box, connect the ground wire to the grounding bolt of the outdoor machine and the indoor mechanical and electrical air box.
•Connect the external and internal communication lines to the 1 and the 2 terminals on the terminal. If the power cord is connected, the printed circuit board will be damaged. And the use of shielded twisted pair wire.
•Do not connect the fastening screws on the front of the cover.
• The power cord must be made of copper wire, and the power supply must be in line with IEC 60245 requirements. If the power cord length exceeds 20m, the need to increase the size.
• The power supply line is fixed with a round connection terminal with an insulating protective sleeve. Not with sheet metal contact and extrusion, in order to avoid the cut line of skin caused by fire.

**Communication wiring figure**

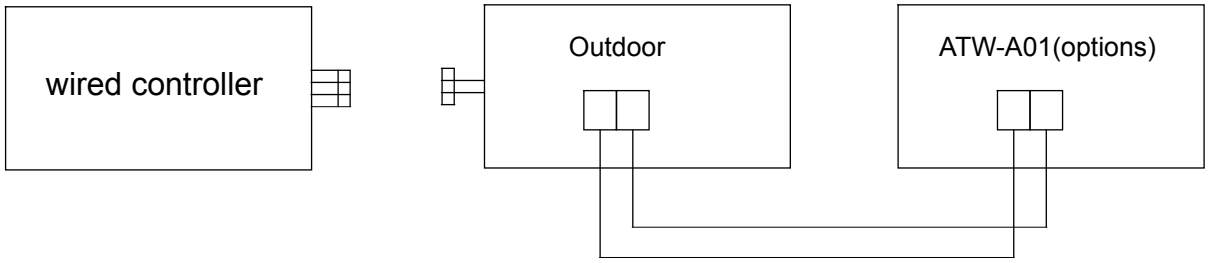


The outdoor and ATW-A01 units are in parallel through 2 non-polar wires.

**Power wiring figure**

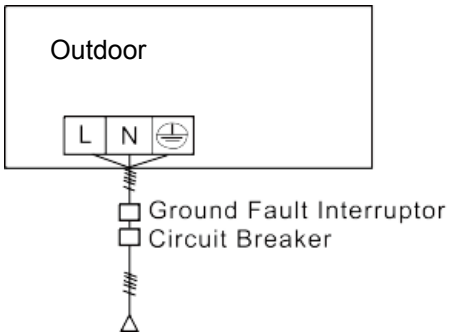


power source: 1PH, 220-240V~, 50/60Hz

ATW-A01 and outdoor use their individual power source

**Outdoor power source and power cable**

| Item / Model | | Power source | Power cable section (mm2) | Circuit breaker (A) | Rated current of residual circuit breaker (A) Ground fault interruptor (mA) response time (S) | Ground wire | |
|---|---|---|---|---|---|---|---|
| | | | | | | Section (mm2) | Screw |
| Individual power | AU082FYCRA(HW) | 1PH, 220-240V~, 50/60Hz | 6 | 32 | 32A 30mA below 0.1S | 6 | M4 |
| | AU112FYCRA(HW) | | 6 | 32 | 32A 30mA below 0.1S | 6 | M4 |
| | AU162FYCRA(HW) | | 8 | 40 | 40A 30mA below 0.1S | 8 | M4 |

•Power cable must be fixed firmly.
•To avide electrical shock, make sure to disconnect the power supply 1 minute or more before servicing the electrical parts.Even after 1 minute,always measure the voltage at the terminals of main circuit capacitors or electrical parts and before touching, make sure that those voltages are 50VDC or less.
•To persons in charge of electrical wiring work: Do not operate the unit until the refrigerant piping is complete. (Running it before the piping is ready will break the compressor)
•Each outdoor must be earthed well.
•When power cable exceeds the range, thichen it appropriately.
•The appliance shall be installed in accordance with national wiring regulations.
•All wiring must be performed by an authorized electrician.
•Be sure to install an earth leakage circuit breaker in accordance with applicable legislation.Failure to do so many cause electrical shock.

**Communication wire for wired controller**

| Length of Signal Line (m) | Wiring Dimensions |
|---|---|
| ≤250 | 0.75mm2 × 3 core shielding line |

•The shielding lay of the signal line must be grounded at one end.
•The total length of the signal line shall not be more than 250m.

**Outdoor unit electrical wiring diagram**

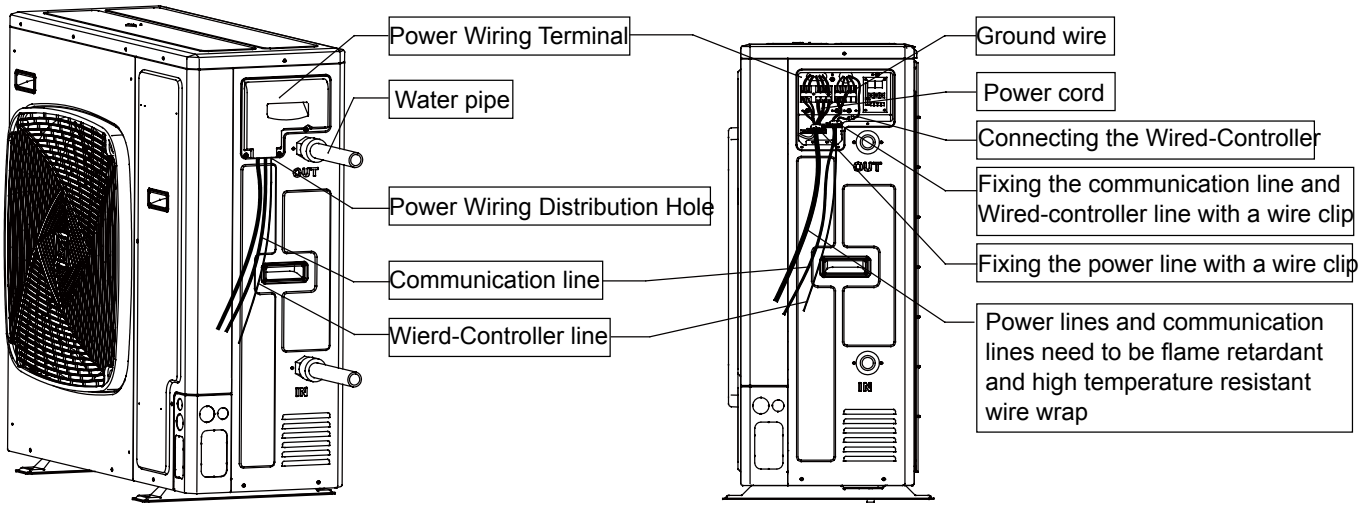


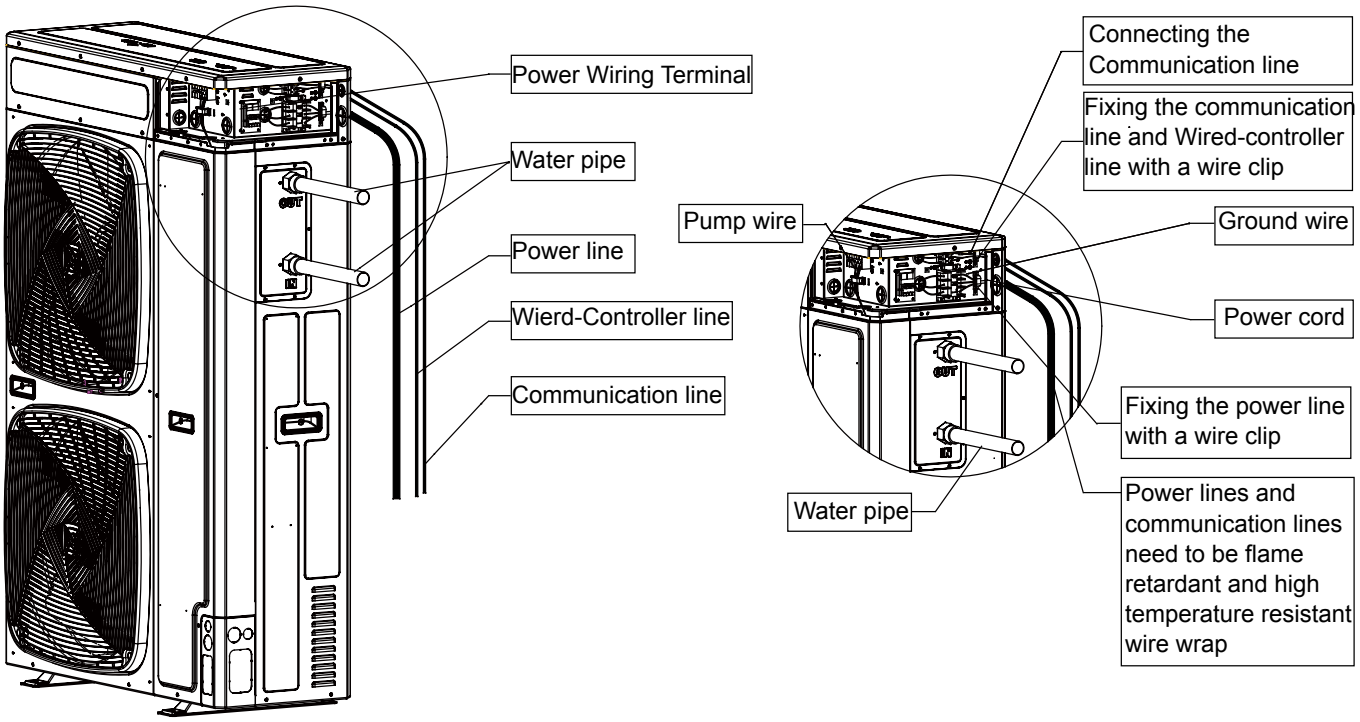


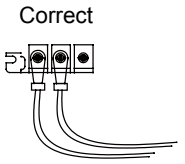


When using a single terminal without terminal, the terminal can not be directly used without flux. Otherwise, it will cause abnormal heating of terminal crimping part. If a single core wiring is used in the wiring, it can be connected directly in the manner shown in the diagram.

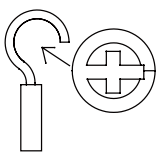

## 15. PCB Photo

PCB code: 0151800423

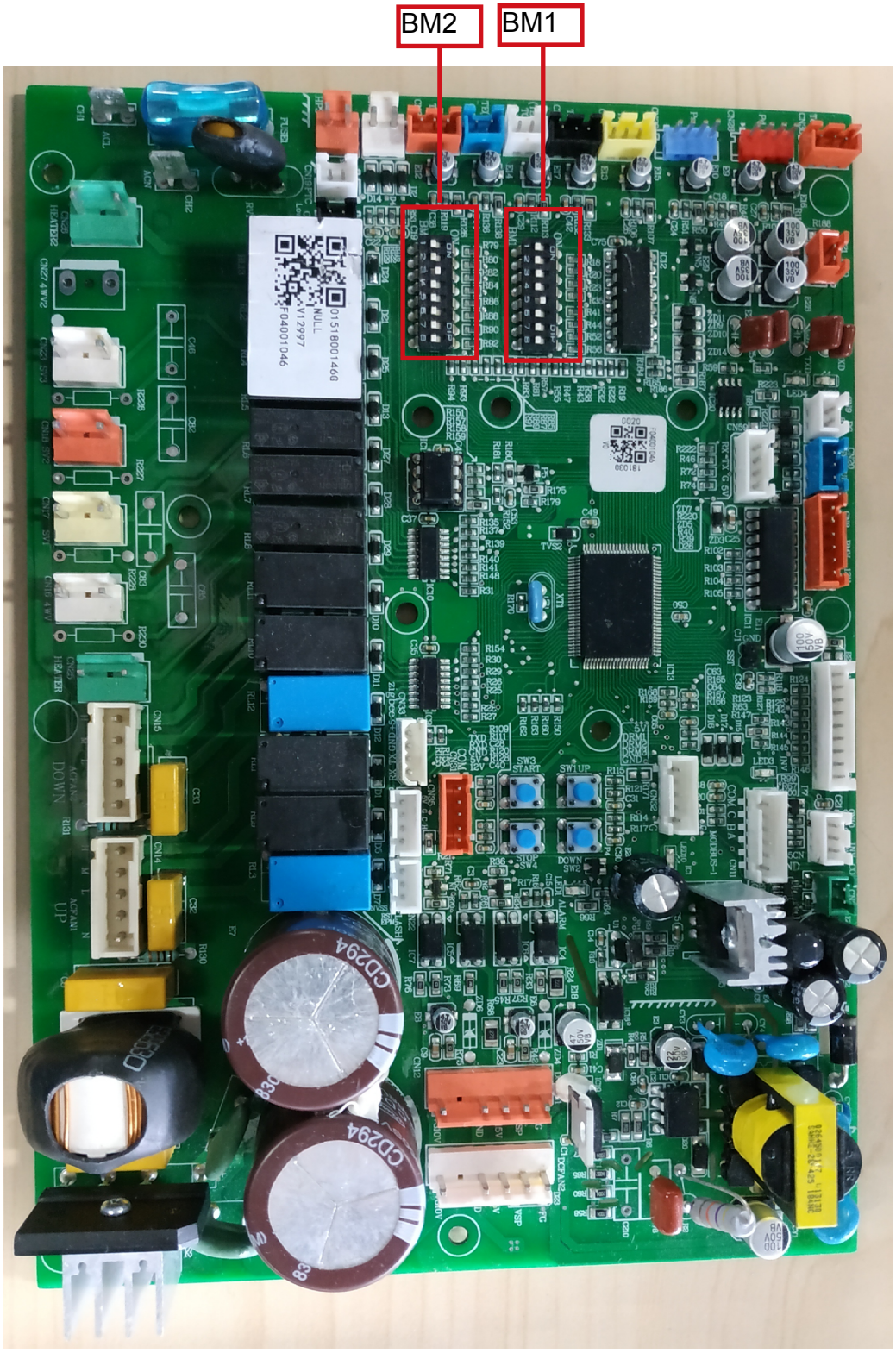

## 16. Dip Switch Setting

**BM1 introduction**

| | | | | | | |
|---|---|---|---|---|---|---|
| BM1_1 | Control type selection | OFF | Wired controller control (default) | | | |
| | | ON | IO board control | | | |
| BM1_2<br>BM1_3<br>BM1_4<br>BM1_5 | Outdoor unit Model selection | [2] | [3] | [4] | [5] | Outdoor unit Model selection |
| | | OFF | OFF | ON | OFF | AU082FYCRA(HW) |
| | | OFF | ON | OFF | OFF | AU112FYCRA(HW) |
| | | OFF | ON | OFF | ON | AU162FYCRA(HW) |
| BM1_6 | Power selection | OFF | Single phase (default) | | | |
| | | ON | Three phases | | | |
| BM1_7 | Reserved | OFF | Reserved (default) | | | |
| | | ON | Reserved | | | |
| BM1_8 | IO board selection | OFF | No IO board (default) | | | |
| | | ON | Connect with IO board | | | |

**BM2 introduction**

| | | | | |
|---|---|---|---|---|
| BM2_1 | Heat exchange unit type | OFF | | Air condition heat exchange unit(default) |
| | | ON | | Hot water heat exchange unit |
| BM2_2 | Control mode selection | OFF | | Networking (default) |
| | | ON | | 2-way valve linkage |
| BM2_3 | HU electrical heating control mode | OFF | | HU electrical heating auto control (default) |
| | | ON | | HU electrical heating force close |
| BM2_4 | Water flow switch fault shielding selection | OFF | | Normal detection (default) |
| | | ON | | Shield for a short time, then resume normal detection |
| BM2_5 | PC and MODBUS selection | OFF | | PC monitor (default) |
| | | ON | | MODBUS |
| BM2_6<br>BM2_7 | Running mode selection | [6] | [7] | Running mode selection |
| | | OFF | OFF | Normal mode (default) |
| | | OFF | ON | Powerful mode |
| | | ON | OFF | Silent mode |
| BM2_8 | Hot water mode selection | OFF | | No hot water (default) |
| | | ON | | Hot water mode |

**bridge instruction**

CJ1:

Short it before power ON-- PCB check its function (used for factory production. Short it after power ON-- time short function, 60 seconds become to 1 second. CJ2: Reserved

## 17. Digital Tube Display

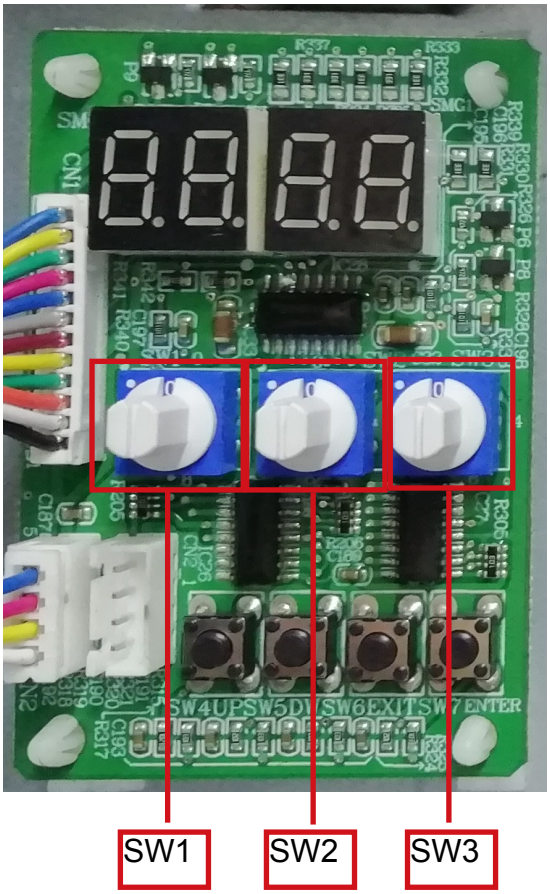


Main function instruction:

By setting the rotary switch, the digital tube will display the unit parameters, the data is inform of decimal integer. During the process of installation, adjustion and maintenance, the whole system's operating parameters can be tested conveniently which can help to check and solve problems quickly and correctly.

| SW1 | SW2 | SW3 | Segment digital tube display content LD2~4 | |
|---|---|---|---|---|
| 0 | 0 | 0 | Err code: "000" means no err happen | |
| 0 | 2 | 0 | Operating mode: Stop:OFF; Cooling mode: CCC; Heating mode: HHH; | |
| 0 | 3 | 0 | Outdoor fan 1 motor speed(rpm) | "345" means 345rpm. |
| 0 | 4 | 0 | Outdoor fan 2 motor speed(rpm) | •Motor speed can be set through pressing "ENTER(SW7)" with 3 seconds, in which "111" will be displayed and the speed and speed class will be showed in turn. Speed class can be increased a grade through pressing "UP"once and can be decreased a grade through pressing "DOWN"once;<br>•"000" will be showed through pressing "Exit(SW6)" with 3 seconds and setting mode will be exit. |

| SW1 | SW2 | SW3 | Segment digital tube display content LD2~4 |
|---|---|---|---|
| 0 | 5 | 0 | Actual frequency of compressor(Hz): 90 means 90Hz<br>•Frequency of compressor can be set through pressing “ENTER(SW7)” with 3 seconds, in which “111” will be displayed and the frequency showed. Frequence can be increased one Hz through pressing “UP” once and can be decreased one Hz through pressing “DOWN” once;<br>•“000”will be showed through pressing “Exit(SW6)” with 3 seconds and setting mode will be exit. |
| 0 | 7 | 0 | Electronic expansion valve step (LEVa1): 90 means 90pls |
| 0 | 9 | 0 | Electronic expansion valve step (LEVa2): 90 means 90pls |
| 0 | B | 0 | Valve output status:<br>LD2: 4WV: (0-off, 1-on); LD3: SV1: (0-off, 1-on); LD4: SV2: (0-off, 1-on) |
| 0 | C | 0 | High pressure switch and Low pressure switch status: LD2: High pressure switch: HPS: (0-off, 1-on) LD3: Low pressure switch: LPS: (0-off, 1-on) LD4: reserved: “-” |
| 0 | D | 0 | Reserved |
| 0 | E | 0 | Compressor electrical heater output:<br>LD2: CH1: (0-off, 1-on);LD3: BH:(0-off, 1-on); LD4: reserved: “-” |
| 0 | F | 0 | Software version:“1.0”means Ver1.0. |
| 0 | 0 | 1 | Pd: Pressure of discharge:unit: kg, a decimal fraction |
| 0 | 2 | 1 | Ps: Pressure of suction: unit: kg, a decimal fraction |
| 0 | 3 | 1 | Td: discharge temperature : (unit:°C) |
| 0 | 5 | 1 | Tdef: defrost temperature: (unit:°C) |
| 0 | 7 | 1 | Toil: oil temperature: (unit:°C) |
| 0 | 9 | 1 | Tc: condensing temperature (unit:°C) |
| 0 | E | 1 | Ts: suction temperature (unit:°C) |
| 0 | 1 | F | Tao Tao: ambient temperature (unit:°C) |
| 0 | 2 | F | Pd_temp:condensing temperature (unit:°C) |
| 0 | 4 | F | Ps_temp: evaporate temperature (unit:°C) |
| 0 | 5 | F | Tliqsc (unit:°C) |
| 0 | 6 | F | Tsco (unit:°C) |
| 0 | 8 | F | Operating time of compressor: Unit: hour |
| 0 | A | F | Operating current of compressor: unit: A, a decimal fraction |
| 0 | B | F | Unit current: CT: unit: A, a decimal fraction |
| 0 | C | F | Direct current voltage of Invertor comperssor: unit: V |
| 0 | E | F | Invertor module temperature of compressor: (unit:°C) |
| 0 | 0 | 7 | Outlet water temperature Two (°C) |
| 0 | 0 | 8 | Ref Rerigerate gas pipe temperature Tho (°C) |
| 0 | 0 | 9 | Refrigerate liquid pipe temperature Thi (°C) |
| 0 | 0 | B | Inlet water temperature Twi (°C) |
| 0 | 0 | C | Hydraulic features:No.1: water flow switch (0-cut off, 1-connected) No.2: Pump status (0-off, 1-on);No.3:Electrical heating (0-off, 1-on)<br>(i.e. “110” means water flow switch is closed, pump is on and Electrical heating is off) |
| 0 | 0 | D | Hydraulic features:No.1: supply water flow switch (0-cut off, 1-connected)<br>No.2: unit on/off signal(0-off, 1-on);No.3: Floor heating valve output status (0-off, 1-on) (i.e. “001” means supply water flow switch is connected,Indoor unit on/off signal is off and Floor heating valve output status is on.) |

# 18. Startup & Running & Maintenance

**a)Preparing for first start up**

Restarting after shutting down for long periods
The Heat pump must be started up for the first time by the Technical Service. Before starting up the Heat pumps, make sure that:
-All safety conditions have been respected.
-The Heat pump system is adequately fixed to the surface it rests on.
-Functional distances have been respected.
-Hydraulic connections have been carried out as indicated in the manual.
-The water circuit is filled and vented. When draining after heat pump operation, take care as the water may be hot.
-The water circuit valves are open.
-Electrical connections have been carried out correctly.
-Voltage is within a tolerance of 10% of the rated voltage for the unit.
-The unit is correctly earthed.
-All electrical and hydraulic connections are tight and have been completed correctly.

**b)Operating characteristics**

**Set point in cooling mode**
(factory set) = 12°C, Hysteresis = 5°C.
The compressor starts with water temperatures above 12°C.
The compressor shuts down with water temperatures of less than 7°C.
**Set point in heating mode**
(factory set) = 45°C, Hysteresis = 5°C.
The compressor starts with water temperatures below 45°C.
The compressor shuts down with water temperatures above 50°C.
In the event of a temporary power failure, when power returns, the mode set previously will be retained in the memory.

**Compressor start up delay**
Two functions prevent the compressor from starting up too frequently
- Minimum time since last start-up 300 seconds.

**Pump**
The electronic board includes a pump control output. The pump starts when the assembly is powered up and at least 60 seconds before the compressor starts up and stops 60 seconds after the assembly shuts down. After the first 60 seconds of pump operation when the water flow is at full speed, the water flow alarm functions are activated (differential pressure switch and pressure difference switch). With a pump connected to terminals Pump on the installer terminal board.

**Fan speed control**
For correct operation of the unit with different outside temperatures, the microprocessor controls the fan speed based on the pressure reading from the pressure probe, thus enabling heat exchange to be increased and/or decreased, maintaining the condensing or evaporation temperature practically constant.
The fan functions independently of the compressor.

**Frost prevention alarm**
To prevent the water freezing and damaging the heat exchanger, the microprocessor shuts down the compressor if the temperature measured by the heat exchanger outlet temperature sensor is less than 3°C. The frost prevention temperature set point can be modified by an authorized service center only and only after verifying that the water circuit contains antifreeze. Tripping of this alarm shuts down the compressor but not the pump, which remains active. To reset normal functions, the outlet water temperature must rise to more than +8°C. Reset is manual.

**Water flow alarm**
The microprocessor provides for management of a water flow alarm controlled by a pressure diference switch fitted as standard on the appliance to be installed on the water delivery piping.
This safety device may trip after the first 60 seconds of pump operation when the water flow is up to speed. Tripping of this alarm shuts down the compressor but not the pump, which remains active. To reset normal functions, the alarm contact must be deactivated for at least 15 seconds.
When electrical current exceeds to setting value and condenser temperature over than 62°C, system will shut down, but not returns to normal operation until the condenser temperature decreased less than 52°C.

**c)Routine maintenance**
Never perform any cleaning operations before having disconnected the unit from the mains power supply. If the supply cord is damaged, it must be replaced by the manufacturer or its service agent or a similarly qualified manufacturer or its service agent or a similarly qualified.
Regular maintenance is fundamental to maintain the efficiency of the unit both in terms of operation and energy consumption. The Technical Assistance Service maintenance plan must be observed, with an annual service which includes the following operations and checks:
-Filling of the water circuit.
-Presence of air bubbles in the water circuit.
-Efficiency of safety devices.
-Power supply voltage.
-Power input.
-Tightness of electrical and hydraulic connections.
-Condition of the compressor contactor.
-Efficiency of the plate heat exchanger heater.
-Checking of operating pressure, superheating and sub cooling.
-Efficiency of compressor heater.
-Cleaning of finned coil (*).
-Cleaning of fan grills.
-Cleaning of condensate drain pan (if installed).
(*) For “Heat pump” appliances, the checks are to be performed quarterly.
For units installed near the sea, the intervals between maintenance should be halved.

**d)Extraordinary maintenance**

Never perform any cleaning operations before having disconnected the unit from the mains power supply.

**Chemical washing**
You are recommended to chemically wash the plate heat exchanger after every 3 years of operation.

**Refrigerant gas content**
The Heat pumps are filled with R32 refrigerant gas and tested in the factory. In normal conditions, there should be no need for the Technical Assistance Service to intervene to check the refrigerant gas. However, over time, small leaks may develop at the joints leading to loss of refrigerant and draining of the circuit, causing the unit to function poorly. In this case, the leaks of refrigerant must be identified and repaired and the refrigerant circuit refilled.
Proceed as follows:
-Empty and dry the entire refrigerant circuit using a vacuum pump connected to the low and high pressure tap until the vacuum meter reads about 10Pa. Wait a couple of minutes and check that this value does not rise to more than 200Pa.
-Connect the refrigerant gas cylinder or a filling cylinder to the low pressure line pressure gauge connection.
-Fill with the quantity of refrigerant gas indicated on the rating plate of the unit.
-Always check the superheating and sub cooling values. In the nominal operating conditions for the appliance, these should be between 5 and 10°C and between 4 and 8°C respectively.
-After a couple of hours of operation, check that the liquid indicator indicates circuit dry (dry-green).

**Important**
In the event of partial leaks, the circuit must be completely emptied before being refilled
The R410a refrigerant must only be filled in the liquid state. Operating conditions other than nominal conditions may produce considerably different values.
Seal testing or identification of leaks must only be carried out using R410a refrigerant gas, checking with a suitable leak detector.

Prohibition
1.The refrigerant circuit must not be filled with a refrigerant other than that indicated of specification.
2.The use of a different refrigerant may cause serious damage to the compressor.
3.Oxygen, acetylene or other inflammable or poisonous gases must never be used in the refrigerant circuit as they may cause explosion or poisoning.
4.Oils other than those indicated on manual before must not be used. The use of different oils may cause serious damage to the compressor.

**d)Shutting down for long periods**
If it is previewed not to use the machine for long periods After deactivating the Heat pump:
-Make sure the model is in the power off model " ", or alternatively disconnect the unit from the power supply.
-Make sure the remote control switch is closed (if present) .
-Close the water valves.

**Important**
If there is a possibility that the outside temperature may drop below zero, there is the risk of freezing.
The water circuit MUST BE EMPTIED AND SHUT OFF POWER (when draining after heat pump operation take care as the water may be hot) or antifreeze must be added in the proportion recommended by the manufacturer.

# 19. YR-E27(Optional wired controller)

## 19.1 Interface Display

(1)Standard Version

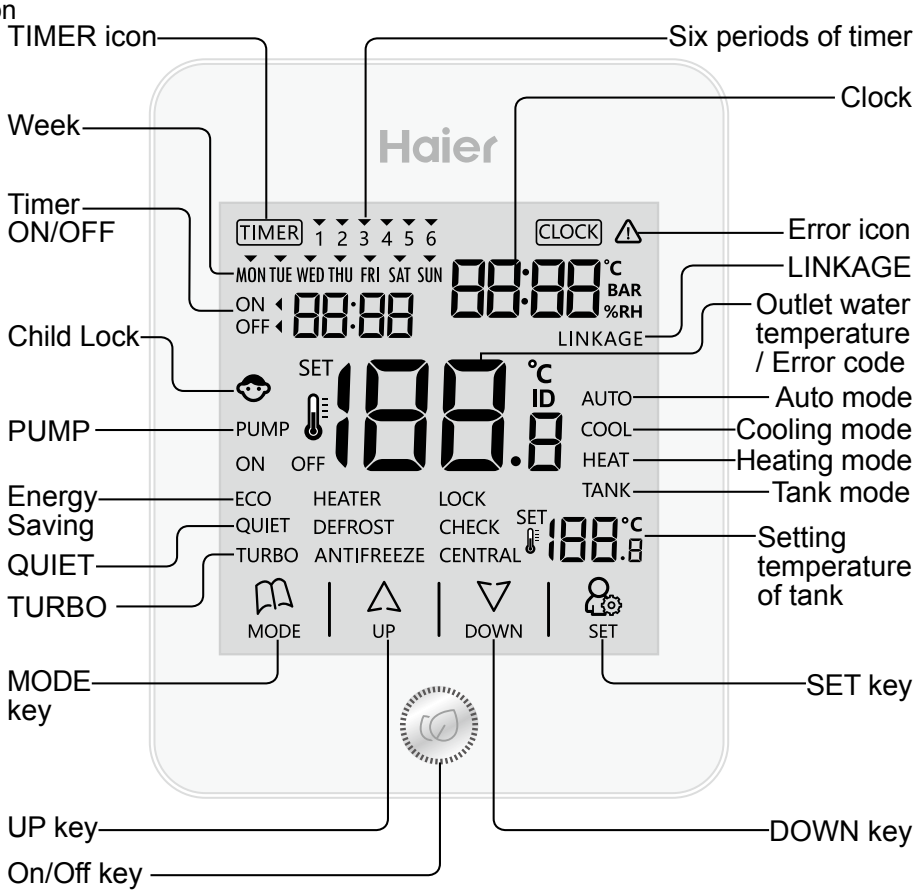


(2)Simple Version

## 19.2 Key and Icon

| | |
|---|---|
| | On/Off key. |
| MODE | Mode key: Press this key to switch mode. |
| UP | Up key: Press this key to adjust temperature in the main interface and other parameter value in other interface. |
| DOWN | Down key: Press this key to adjust temperature in the main Interface and other parameter value in other interface. |
| SET | Set key: Press this key to set special functions (ECO, QUIET and TURBO) and also can be combined with other keys for some other function settings. |

| | |
|---|---|
| | Outlet Water temperature display , Error code display |
| | Clock display , parameter display |
| TIMER | Timer: This icon will be displayed only when timer function is set. |
| 1 2 3 4 5 6 | Six periods of timer |
| | Timer on/off and display the start time of next period of timer |
| MON TUE WED THU FRI SAT SUN | Week display |
| | Error icon |
| | Child Lock: This icon will be displayed only when child lock function is set. |
| PUMP | Pump: this icon will be displayed when pump is opened. |
| ON | On: This icon will be displayed when controller is turned on. |

| | |
|---|---|
| OFF | Off: This icon will be displayed when controller is turned off. |
| ECO | Energy Saving: This icon will be displayed only when energy saving function is set. |
| QUIET | Quiet: This icon will be displayed only when quiet is set. |
| TURBO | Turbo: This icon will be displayed only when turbo is chosen. |
| AUTO | Auto mode |
| COOL | Cooling mode |
| HEAT | Heating mode |
| TANK | Tank mode |
| | The setting temperature of the tank. |
| HEATER | Heater function |
| DEFROST | Defrost icon |
| ANTIFREEZE | Antifreeeze icon |
| LOCK | Lock function |
| CHECK | Check function |
| CENTRAL | Central function |
| LINKAGE (Reserved) | Linkage function which is reserved |

Note:
1. Setting range:
1) Tank mode: 25°C~75°C (the default is 42°C).
2) Cooling mode of air conditioning: water temperature 5°C~20°C (the default is 9°C).
3) Heating mode of air conditioning: water temperature 25°C~55°C (the default is 40°C).Setting accuracy is 0.5°C.
2. Outlet water temperature display range: 0°C~100°C,display accuracy is 0.1°C.
3. The controller has two kinds of main display interface, standard version and simple version. The simple version has no timer, week, clock.If you want to change the interface,you need to change the DIP switch(SW1-6) of the wired controller,and it willbe effective after the system is powered again.

## 19.3 Operation

(1)Basic function description

| Basic function description | Method of operation |
|---|---|
| ON/OFF | Press the key to switch on/off the wired controller. |
| Mode control | In the state of on, press the key MODE to change mode.<br>Whether there is “tank” mode or not depends on the indoor unit setting. |
| Adjusting setting temperature | In the state of on,press the key UP or DOWN to adjust the setting temperature. |

(2)Special function index

| Function | Method of operation |
|---|---|
| Forced to start pump (for debugging) | In the state of off, long press the key SET for 15 seconds. |
| Set backlight time | In the state of off, press the key DOWN and SET for 5 seconds, 00 (stable lighting) /15S/30S/60S. Adjust the value by pressing the key UP or DOWN and confirm by pressing the key SET. |
| Timer mode | Press the key SET for 5 seconds to enter the timer ON/OFF setting, choose ON/OFF by pressing the key UP or DOWN and press the SET to confirm. |
| Time setting | Press the key SET for 10 seconds to enter into time setting function. |

| Function | Method of operation |
|---|---|
| Set parameter of timer | In the state of ON, long press the key DOWN and SET for 5 seconds to enter. |
| Check parameters and change functions (for debugging) | When the backlight is on, press the key UP and SET for 5 seconds to enter. |
| Set and cancel child lock | Press the key UP and DOWN for 10 seconds to set or cancel. |
| ECO(default) /QUIET/TURBO | In the state of on, press the key SET to enter, switch by pressing the key UP or DOWN, and confirm by pressing the key SET again. |

## Setting special functions

In the state of on, press the key SET , then swich among ECO ,QUIET and TURBO by pressing UP or DOWN key, finally press key SET to confrim.If there is no key is pressed for 10 seconds,it will automatically exit and the previous setting is invalid.

## Child lock

Press the key UP and DOWN for 10 seconds to set or cancel child lock. In the state of child lock, all keys are not available.

## ON/OFF

Press the key to switch on /off the wired controller.

## Forced to start pump (for debugging)

In the state of off, press the key SET for 15 seconds to enter and press the key SET for 15 seconds again to exit.

## Checking parameters and change functions (for debugging)

When the backlight is on, press the key UP and SET for 5 seconds to enter into this function's interface , which is available under the status of on or off.
(Some functions reserved, if the relevant device is not connected in the system, the relevant function code and machine number will not participate in the loop.)

(1) Press the key UP or DOWN to switch the function code, category A (Heat exchange unit)/ B (outdoor unit)/ C (indoor unit-- reserved)/ D (Module control board-- reserved)/ E (slave wired controller -- reserved).
(2) A/B is displayed after the decimal point in the intemedidate temperature display area,function code(00-FF) is displayed in the lower right corner.00-3F can be viewed and changed,while 40-FF can only be queried.The specific parameters are displayed in the upper right corner.

(3) Switch the function code by using the UP or DOWN key. If the fuction code is flashing,which means that it can be queried and can be changed.And if the function code is still,which means that it can only be queried. When the function code is flashing, press the SET key to make the function code still. Meanwhile, the parameter value flashes to indicate that it can be changed. You can adjust the value by the UP or DOWN key. After adjustment, press the SET key again and the parameter value will not flash. And the function code flashes, indicating that the previous layer operation is returned. If there is no operation for over 10 seconds, or press the SET key in the state of viewing the parameter (when function code is 40-7F), exit the parameter viewing and setting interface. And you can also exit this interface by pressing on/off key.

(4) If there is no reply from the air-condition, theparemeter display will be “ --”. If the communication returns that defrost, check or antifreeze is running, relevant icon will dispaly

| Category | Function code | Function description | Set/ Query |
|---|---|---|---|
| A | 00 | ON/OFF | Can be queried and set |
| A | 01 | Setting mode | Can be queried and set |
| A | 02 | temperature setting | Can be queried and set |
| A | 03 | Temperature compensation | Can be queried and set |
| A | 04 | Electric heating | Can be queried and set |
| A | 05 | Pump | Can be queried and set |
| A | 06 | Centralized controller group number | Can be queried and set |
| A | 07 | Rust prevention operation | Can be queried and set |
| A | 08 | Floor dry | Query only |
| A | 09 | Check 1 | Can be queried and set |
| A | 0A | Check 2 | Can be queried and set |
| A | 0B-3F Reserved | Reserved function, does not participate in the loop when the function code loops | Can be queried and set |
| A | 40 | Type of heat exchange unit | Query only |
| A | 41 | Operation mode | Query only |
| A | 42 | Antifreeze | Query only |
| A | 43 | Rust prevention operation | Query only |
| A | 44 | Defrost | Query only |
| A | 45 | Current fault | Query only |
| A | 46 | Number of connected indoor controllers | Query only |
| A | 47 | Number of connected indoor controllers that is on. | Query only |
| A | 48 | Number of connected indoor controllers that is thermo. on. | Query only |
| A | 49 | Power | Query only |
| A | 4A | Electric heating state | Query only |
| A | 4B | Pump state | Query only |
| A | 4C | Micro switch | Query only |

| Category | Function code | Function description | Set/ Query |
|---|---|---|---|
| A | 4D | Pressure difference switch | Query only |
| A | 4E | Two-way valve chain | Query only |
| A | 4F | Low voltage switch | Query only |
| A | 50 | Internal machine regulating valve target overheating (undercooling) degree | Query only |
| A | 51 | PMV opening degree | Query only |
| A | 52 | Heat exchange unit antifreeze  temperature Tz | Query only |
| A | 53 | Heat exchange unit inlet water temperature Twi | Query only |
| A | 54 | Heat exchange unit outlet water temperature Two | Query only |
| A | 55 | Heat exchanger unit refrigerant liquid pipe temperature Thi | Query only |
| A | 56 | Heat exchanger unit refrigerant gas pipe temperature Tho | Query only |
| A | 57 | Cumulative running time | Query only |
| A | 58 | Continuous running time | Query only |
| A | 59 | Program version number | Query only |
| A | 5A | E2 version | Query only |
| A | 5B | Historical error 1 | Query only |
| A | 5C | Historical error 2 | Query only |
| A | 5D | Historical error 3 | Query only |
| A | 5E-FF Reserved | Reserved function, does not participate in the loop when the function code loops | Query only |
| B | 00-3F Reserved | Reserved function, does not participate in the loop when the function code loops | Can be queried and set |
| B | 40 | Operation mode | Query only |
| B | 41 | Outdoor unit quiet | Query only |
| B | 42 | Defrost | Query only |
| B | 43 | Current outdoor unit error code | Query only |
| B | 44 | Type of outdoor unit | Query only |
| B | 45 | Power supply voltage type | Query only |
| B | 46 | Power frequency type | Query only |

| Category | Function code | Function description | Set/ Query |
|---|---|---|---|
| B | 47 | Horse power | Query only |
| B | 48 | Compressor target operating frequency | Query only |
| B | 49 | Actual operating frequency of the compressor | Query only |
| B | 4A | Speed of fan 1 | Query only |
| B | 4B | Speed of fan 2 | Query only |
| B | 4C | Electronic expansion valve opening degree | Query only |
| B | 4D | Target Pd | Query only |
| B | 4E | Actual Pd | Query only |
| B | 4F | Saturation temperature of Target Pd | Query only |
| B | 50 | Saturation temperature of actual Pd | Query only |
| B | 51 | Target Ps | Query only |
| B | 52 | Actual Ps | Query only |
| B | 53 | Saturation temperature of Target Ps | Query only |
| B | 54 | Saturation temperature of actual Ps | Query only |
| B | 55 | Temperature of Td | Query only |
| B | 56 | Temperature of Ts | Query only |
| B | 57 | Temperature of Tao | Query only |
| B | 58 | Temperature of Tdef | Query only |
| B | 59 | Temperature of Toil | Query only |
| B | 5A | Compressor module temperature | Query only |
| B | 5B | Compressor current | Query only |
| B | 5C | Compressor DC voltage | Query only |
| B | 5D | Cumulative running time | Query only |
| B | 5E | Continuous running time | Query only |
| B | 5F | Program version number | Query only |
| B | 60 | E2 version | Query only |

| Category | Function code | Function description | Set/ Query |
|---|---|---|---|
| B | 61 | Historical error 1 of outdoor unit | Query only |
| B | 62 | Historical error 2 of outdoor Unit | Query only |
| B | 63 | Historical error 3 of outdoor Unit | Query only |
| B | 64-FF Reserved | Reserved function, does not participate in the loop when the function code loops | Query only |

(5) Timer

Note: This function is not available when the dial code is simple.

In the on state, press the key DOWN and SET for 5 seconds to enter this function interface.

The default values are as follows

| Week icon | Time period | Default start time | Default switch | Default temperature |
|---|---|---|---|---|
| MON TUE WED THU FRI | 1 | 6:00 | ON | Cooling mode: 9°C; Heating mode: 40°C; Hot water: 42°C. |
| MON TUE WED THU FRI | 2 | 8:00 | OFF | Cooling mode: 9°C; Heating mode: 40°C; Hot water: 42°C. |
| MON TUE WED THU FRI | 3 | 12:00 | ON | Cooling mode: 9°C; Heating mode: 40°C; Hot water: 42°C. |
| MON TUE WED THU FRI | 4 | 13:00 | OFF | Cooling mode: 9°C; Heating mode: 40°C; Hot water: 42°C. |
| MON TUE WED THU FRI | 5 | 18:00 | ON | Cooling mode: 9°C; Heating mode: 40°C; Hot water: 42°C. |
| MON TUE WED THU FRI | 6 | 22:00 | ON | Cooling mode: 9°C; Heating mode: 40°C; Hot water: 42°C. |
| SAT | 1 | 8:00 | ON | Cooling mode: 9°C; Heating mode: 40°C; Hot water: 42°C. |
| SAT | 2 | 9:00 | OFF | Cooling mode: 9°C; Heating mode: 40°C; Hot water: 42°C. |
| SAT | 3 | 12:00 | ON | Cooling mode: 9°C; Heating mode: 40°C; Hot water: 42°C. |

| Week icon | Time period | Default start time | Default switch | Default temperature |
|---|---|---|---|---|
| SAT | 4 | 13:00 | OFF | Cooling mode: 9°C;<br>Heating mode: 40°C;<br>Hot water: 42°C. |
| SAT | 5 | 18:00 | ON | Cooling mode: 9°C;<br>Heating mode: 40°C;<br>Hot water: 42°C. |
| SAT | 6 | 22:00 | ON | Cooling mode: 9°C;<br>Heating mode: 40°C;<br>Hot water: 42°C. |
| SUN | 1 | 8:00 | ON | Cooling mode: 9°C;<br>Heating mode: 40°C;<br>Hot water: 42°C. |
| SUN | 2 | 9:00 | OFF | Cooling mode: 9°C;<br>Heating mode: 40°C;<br>Hot water: 42°C. |
| SUN | 3 | 12:00 | ON | Cooling mode: 9°C;<br>Heating mode: 40°C;<br>Hot water: 42°C. |
| SUN | 4 | 13:00 | OFF | Cooling mode: 9°C;<br>Heating mode: 40°C;<br>Hot water: 42°C. |
| SUN | 5 | 18:00 | ON | Cooling mode: 9°C;<br>Heating mode: 40°C;<br>Hot water: 42°C. |
| SUN | 6 | 22:00 | ON | Cooling mode: 9°C;<br>Heating mode: 40°C;<br>Hot water: 42°C. |

After entering the setting interface, the week display area displays the week character, and the time period value is displayed above it.
You can switch between the time periods by using the UP and DOWN keys.You can also quickly switch between weeks by pressing the MODE key.
In the display state of a certain period of time, press the SET key to enter the parameter settings. You can switch the hour, minute, on/off, and temperature by the MODE or SET key. Switch to the corresponding position, its parameters flashing, indicating that it can be changed. Using the up and down keys to change its parameter value. Pressing the mode or set key to switch will save the previous settings.
If there is no operation for 10 seconds or if the ON/OFF key is pressed, the function will be exited and the last changed parameter will not be saved.

## 19.4 Week and clock function settings

**Note: This function is not available when the dial code is simple.**

Enter the week and clock setting by pressing and holding the SET key for 10 seconds. After you enter this function, CLOCK icon and the current value in MON TUE WED THU FRI SAT SUN flashes, pressing UP and DOWN keys to change the week value. By pressing the SET key to switch to the hour setting, the hour value flashes at this time, you can change the parameter by the UP and DOWN keys. Then press the key to switch to the minute setting, the minute value flashes, you can change the minute value by using the UP and DOWN keys and press the SET key to confirm the change.If there is no operation for 10 seconds, the function will be exited and the last changed parameter will not be saved.

## 19.5 Dip switch

| SW1 | Definition content | Specific definition |
|---|---|---|
| 1 | Reserved | Reserved |
| 2 | Whether to display the outlet water temperature | ON -- do not display<br>OFF -- display |
| 3 | Whether it is the demo version | ON -- demo version<br>OFF -- Non-demo version |
| 4 | Single cooling | ON -- Single cooling<br>OFF -- normal |
| 5 | Single heating | ON -- Single heating<br>OFF -- normal |
| 6 | Simple | ON -- simple<br>OFF -- normal |
| 7 | Reserved | Reserved |
| 8 | Reserved | Reserved |

## 19.6 Wired Controller Wiring Instruction

1. First, put communication wire through the hole in the backplane.

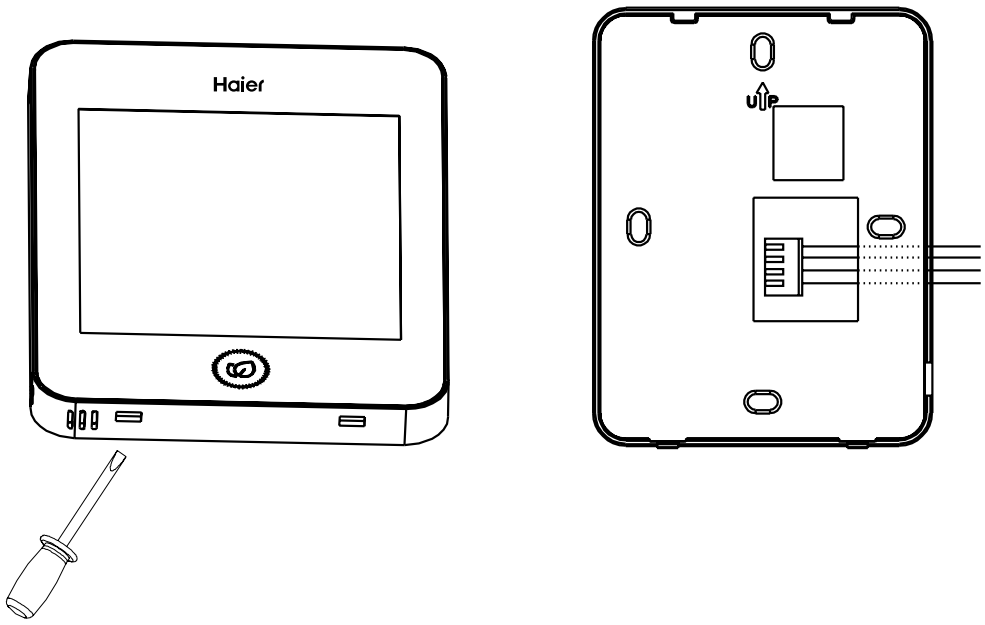

2. Fix backplane and then connect communication wire to CN1 port of wired controller. Finally put the front cover of wired controller to backplane to complete the installation.

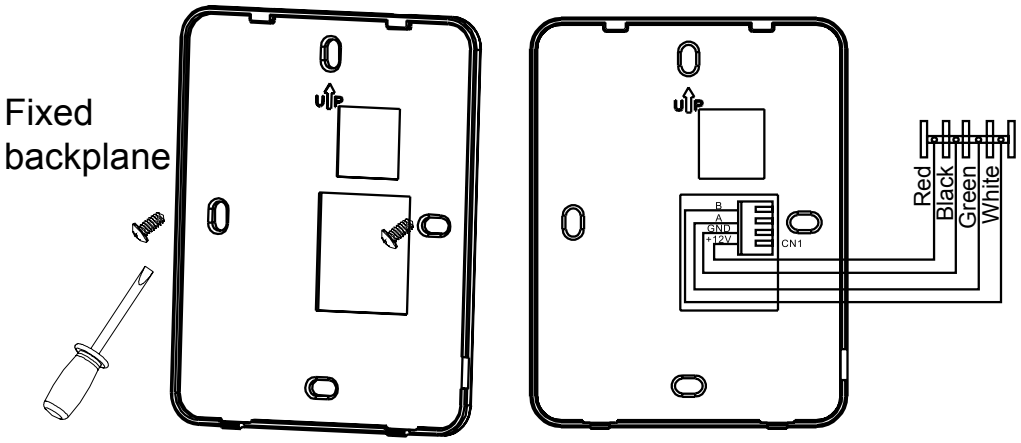

## 20. Error Code

| Error code | Error code definitionerror | Notes |
|---|---|---|
| 1 | In water temp.sensor(Twi)failure | Restorable |
| 2 | Out water temp.sensor(Two)failure | |
| 3 | In refrigerant temp.sensor(Thi)failure | |
| 4 | Out refrigerant temp.sensor(Tho) failure | |
| 7 | Communication fault with wired controller | |
| 10 | Flow rate too low failure | Restorable, 3 times fault an hour lock |
| 15 | Antifreeze fault | |
| 16 | Heat exchange unir HU  in/out water remp. too high | Restorable |
| 20 | Defrosting temp.sensor(Te)failure | |
| 21 | Ambient temp.sensor(Ta)failure | |
| 22 | Suction temp.sensor(Ts)failure | |
| 23 | Discharging temp.sensor(Td)failure | |
| 28 | High pressure sensor failure | |
| 29 | Low pressure sensor failure | |
| 30 | High pressure switch HPS failure | Restorable, 3 times fault an hour lock |
| 34 | Discharging temp. too high protection(Td) | |
| 35 | 4-way valve reversing failure | |
| 38 | High pressure too low protection(Pd) | |
| 39 | Low pressure too low(Ps)/compres-sion ratio too high protection | |
| 40 | High pressure too high protection(Pd) | |
| 43 | Discharging temp. too high protection(Td) | |
| 46 | Discharging communication fault with IGBT Power Moudule | Restorable |
| 71 | DC FAN failure | Restorable, 3 times fault an hour lock |
| 75 | High-low differential pressure too small/no differential pressure | |
| 82 | Compressor current protection | |
| 83 | Outdoor unit model BM setting error | |
| 110 | Module hardware excess current | |
| 111 | Compressor out of step | |
| 117 | Software excess current | |

When the  screen of wire controller display hereinafter code,the unit is standby.Please check the parameters according to standby reason.

| Standby code | Standby reason | Notes |
|---|---|---|
| 555.1 | Outer circumstance temp.Ta>27°C heating standby | Restorable |
| 555.3 | Outer circumstance temp.Ta>54°C or Ta<-10°C, refrigerantion standby | |
| 555.4 | Oil temp. fail to meet the condition of system start | |
| 555.5 | Outdoor unit mode don't match with indoor unit mode ,outdoor unit setting single cold single heat mode conflicted with indoor unit mode cause to standby | |

## 21. Troubleshooting

[1,2,3,4 ,20-24,69] Temperature sensor failure

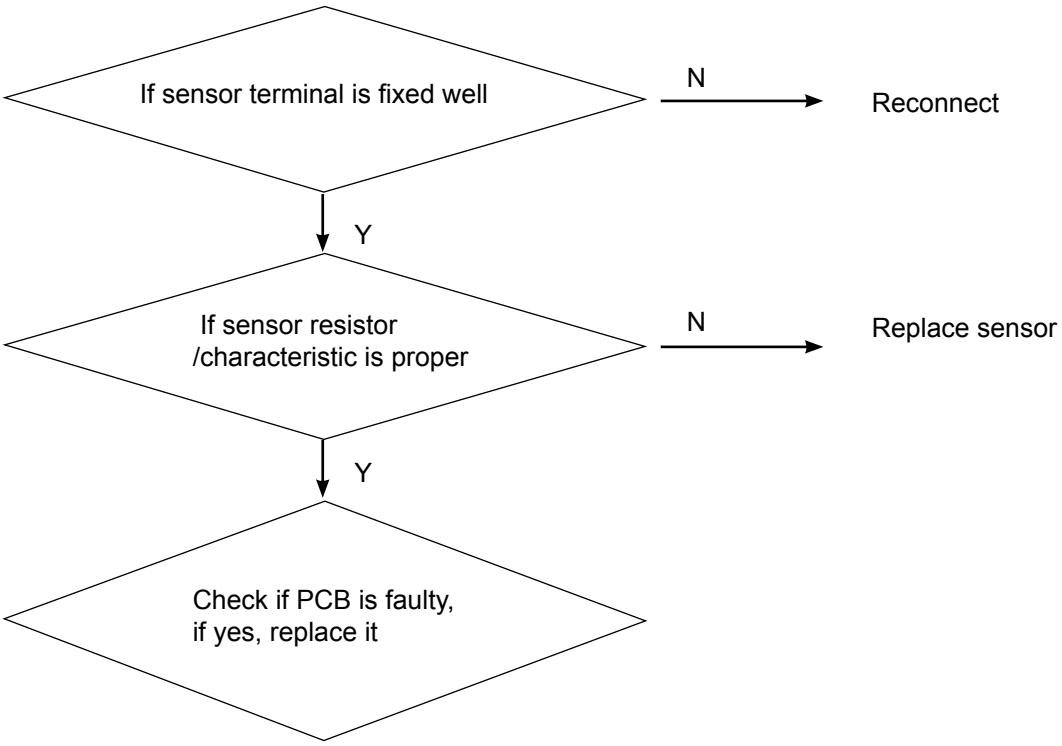

08,10: System water flow protection

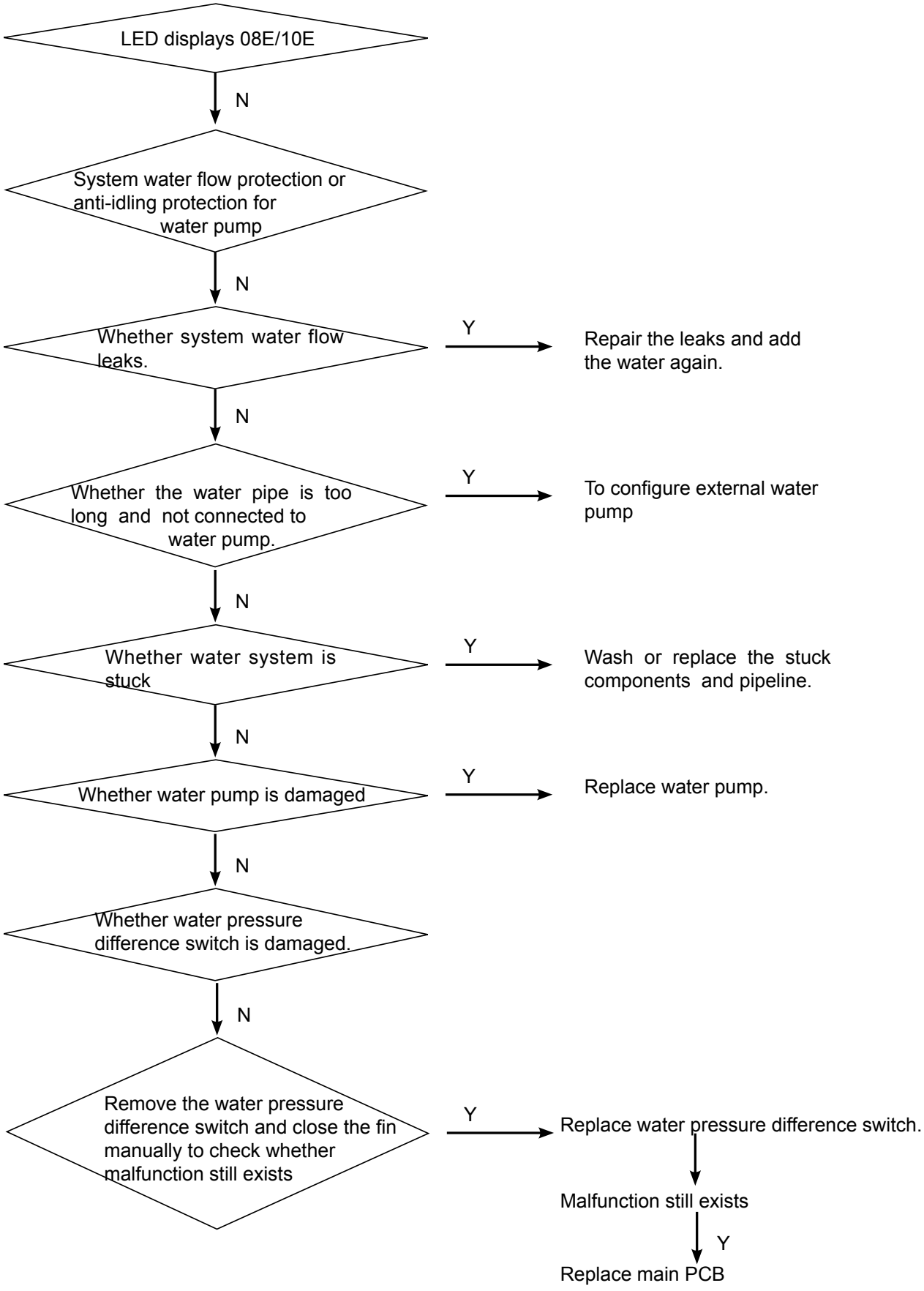

[28, 29] High/low pressure sensor failure

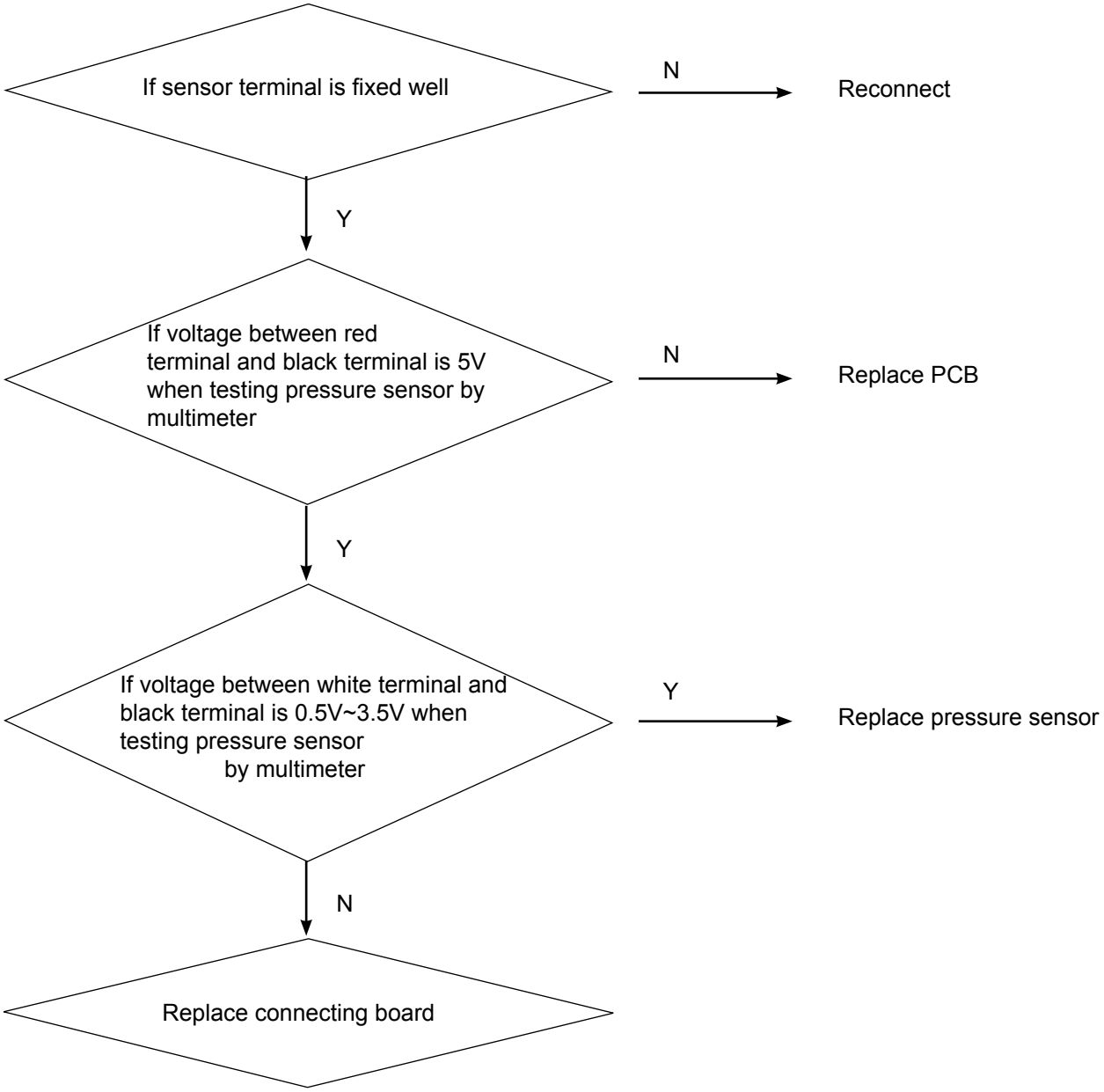

[30] High pressure switch failure

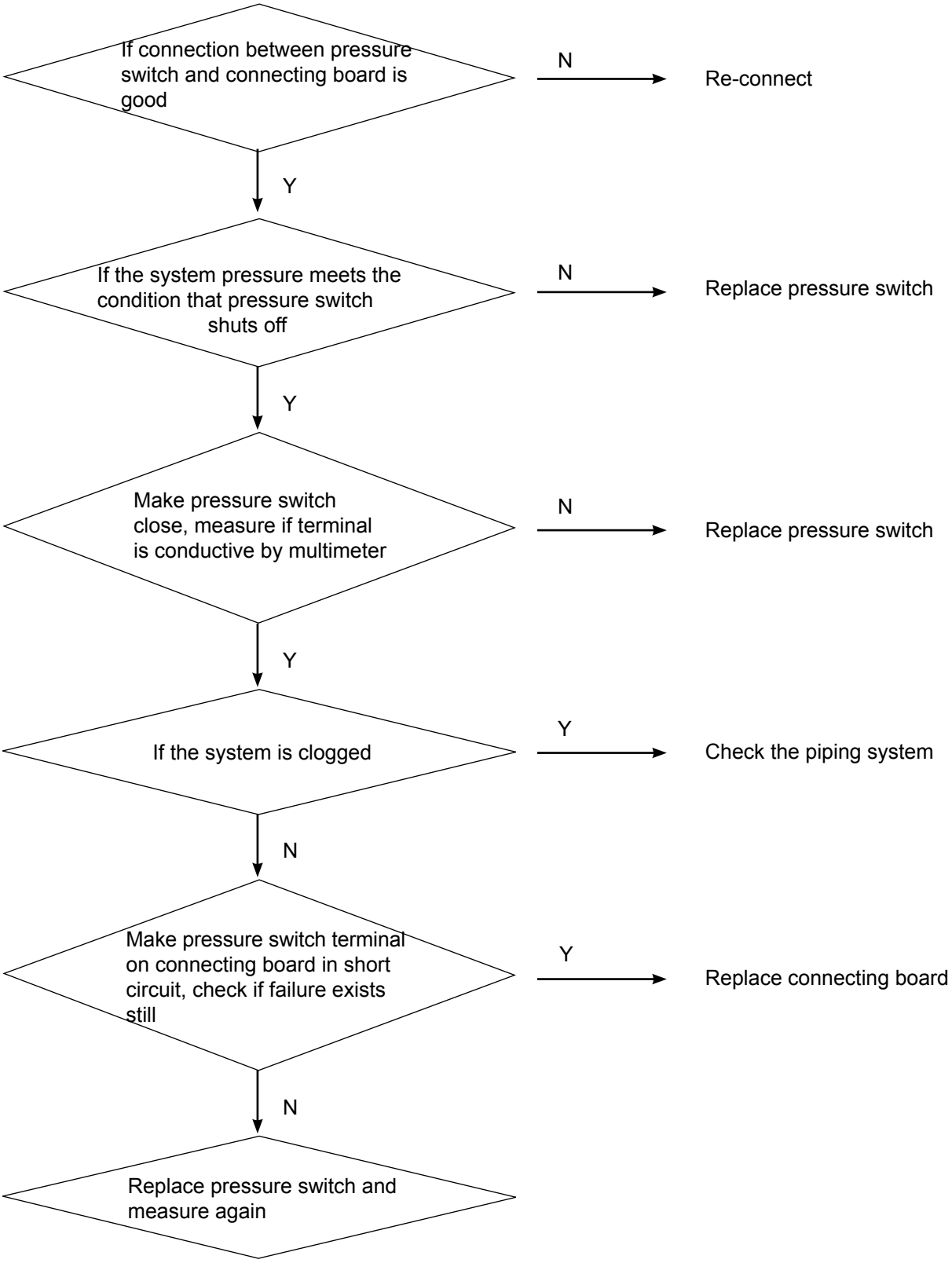

[33] Outdoor EEPROM failure

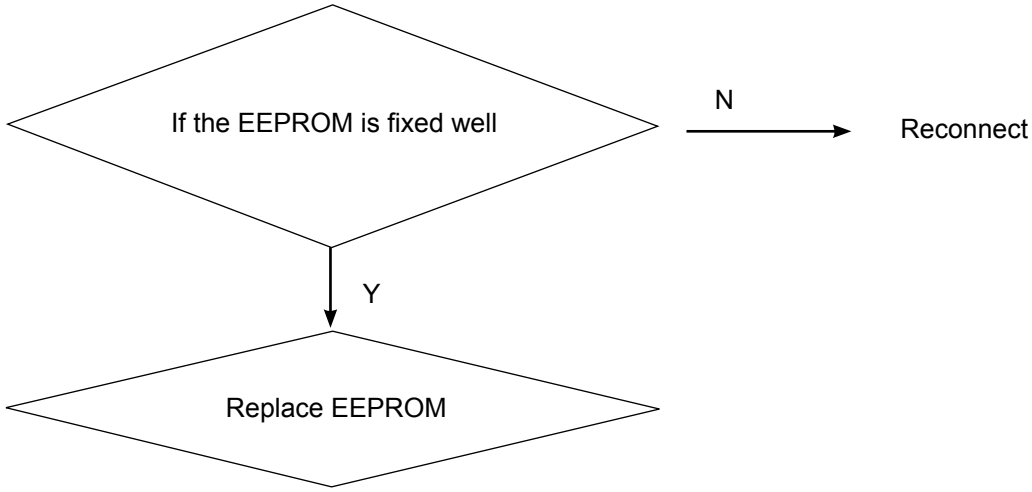


[34] Protection of discharging temp. too high

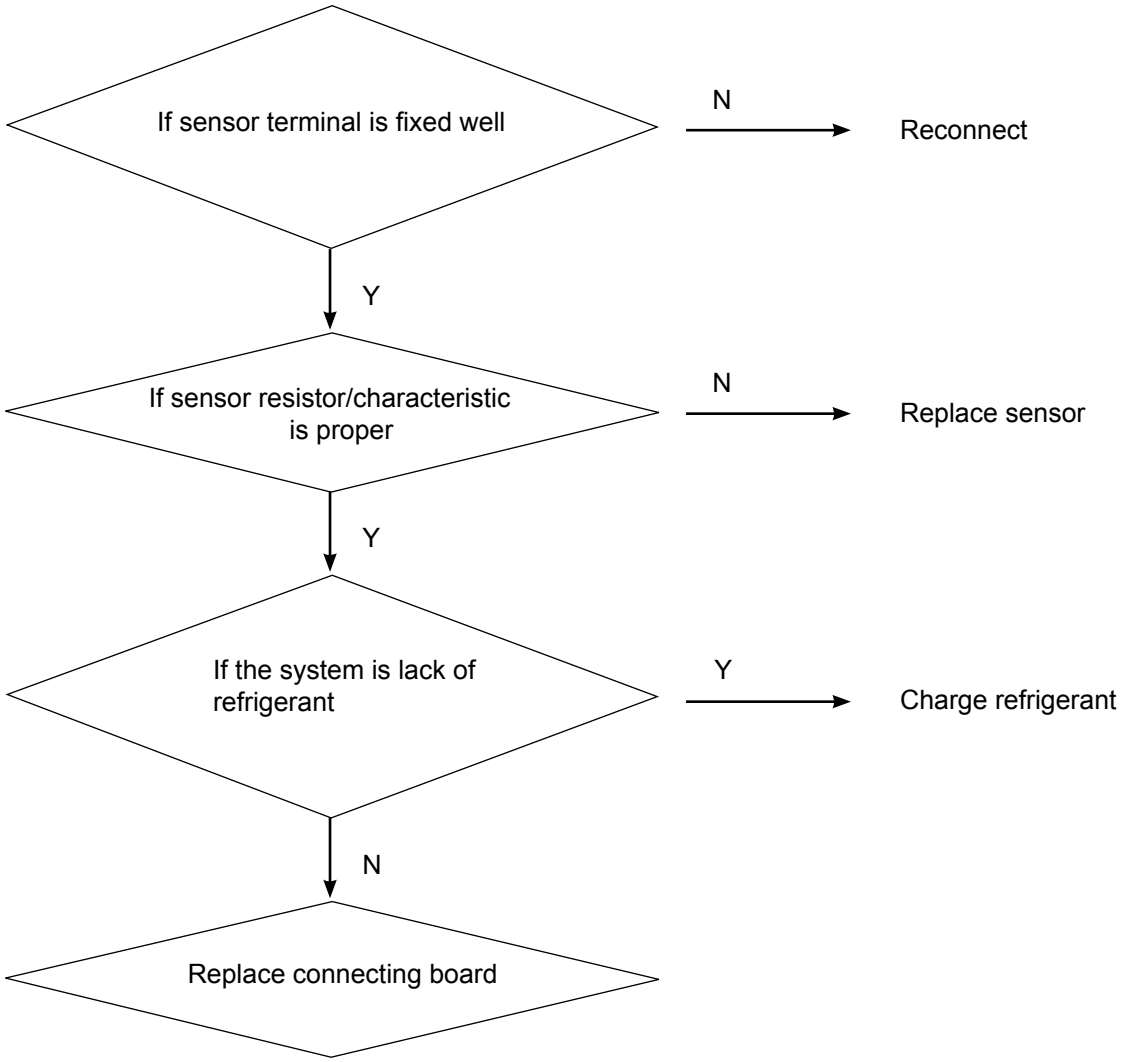

[35] 4-way valve reversing failure, or Temperature sensor Two, Twi, Thi, Tho of Hydraulic module is wrong installed

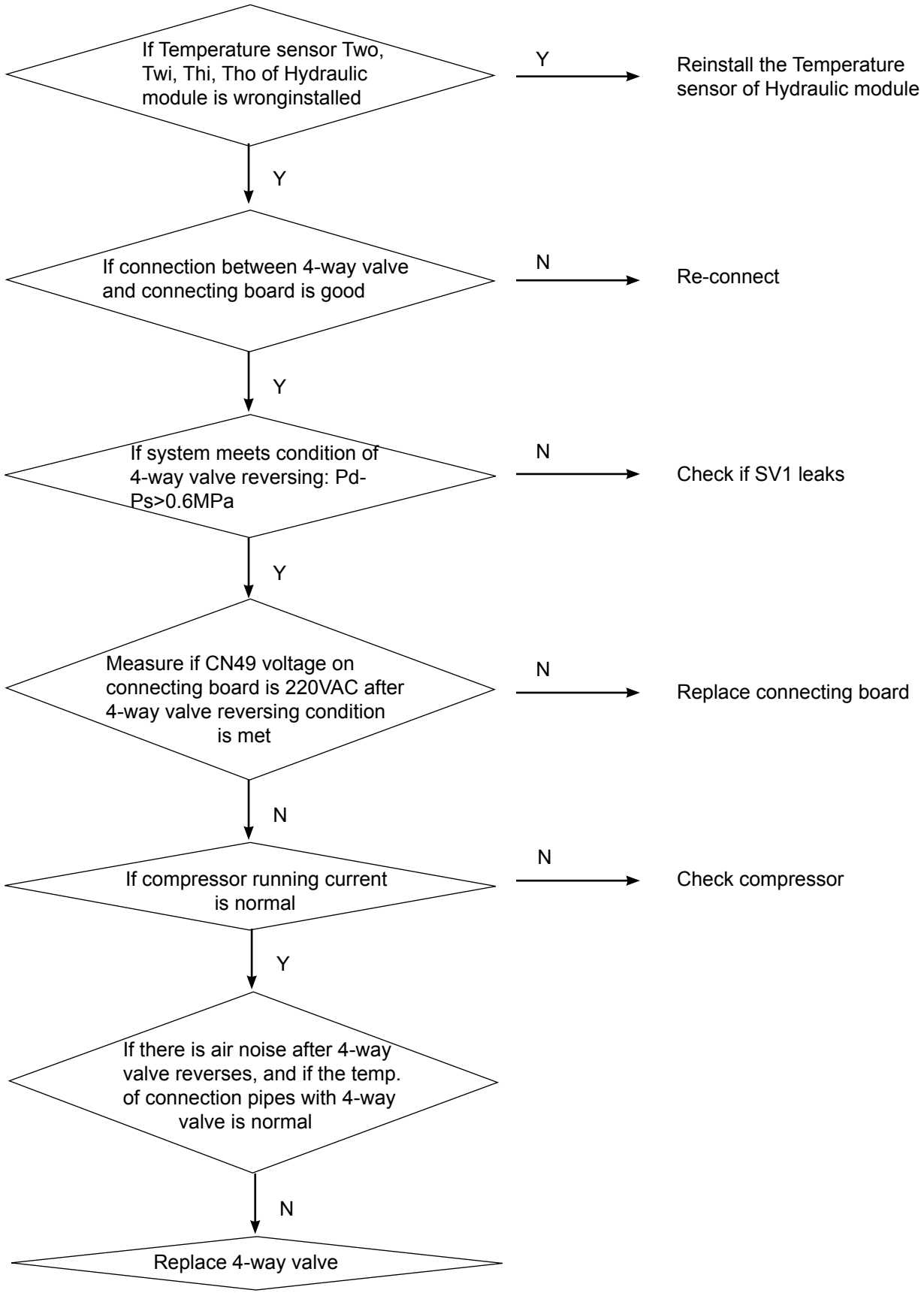

[39-0, 39-1] Low pressure too low and compression ratio too high

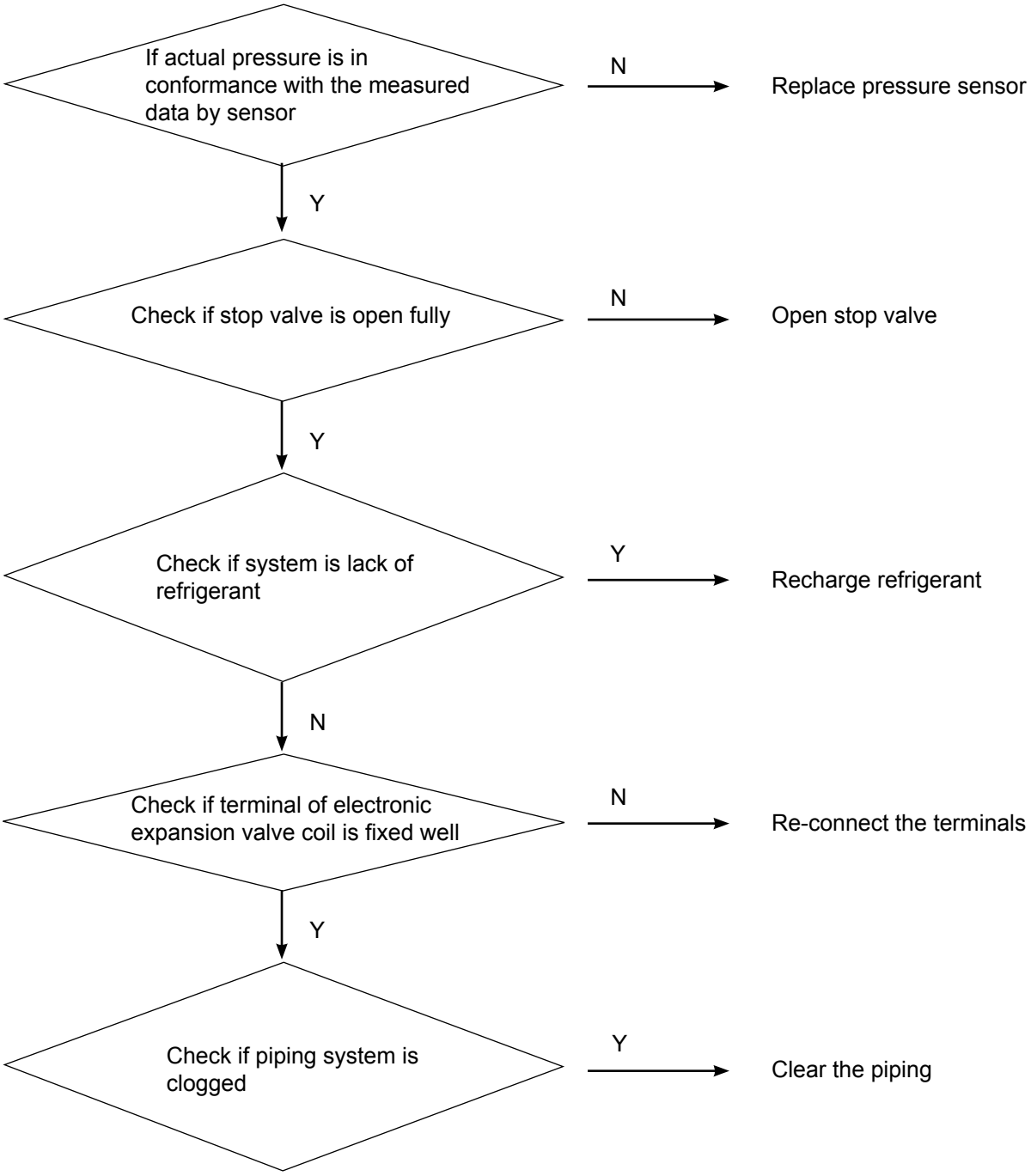

[39-2] Compression ratio too low

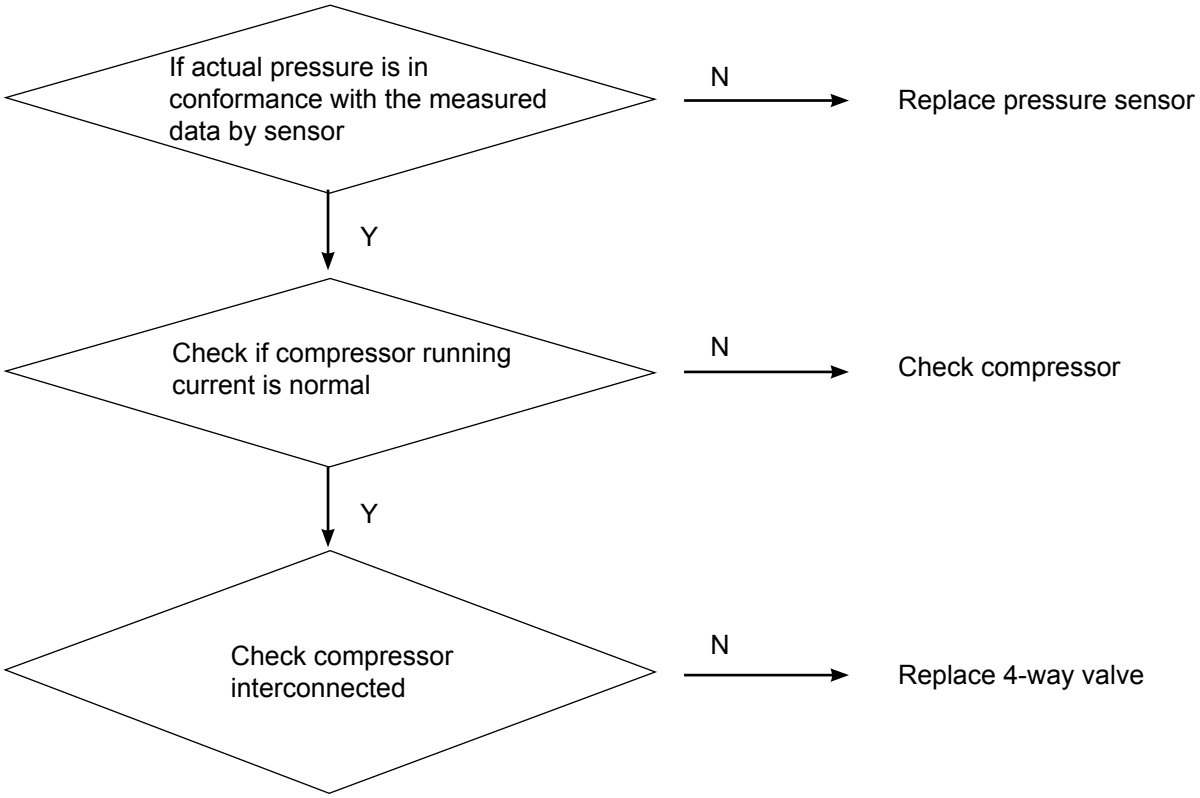

[40] High pressure too high failure

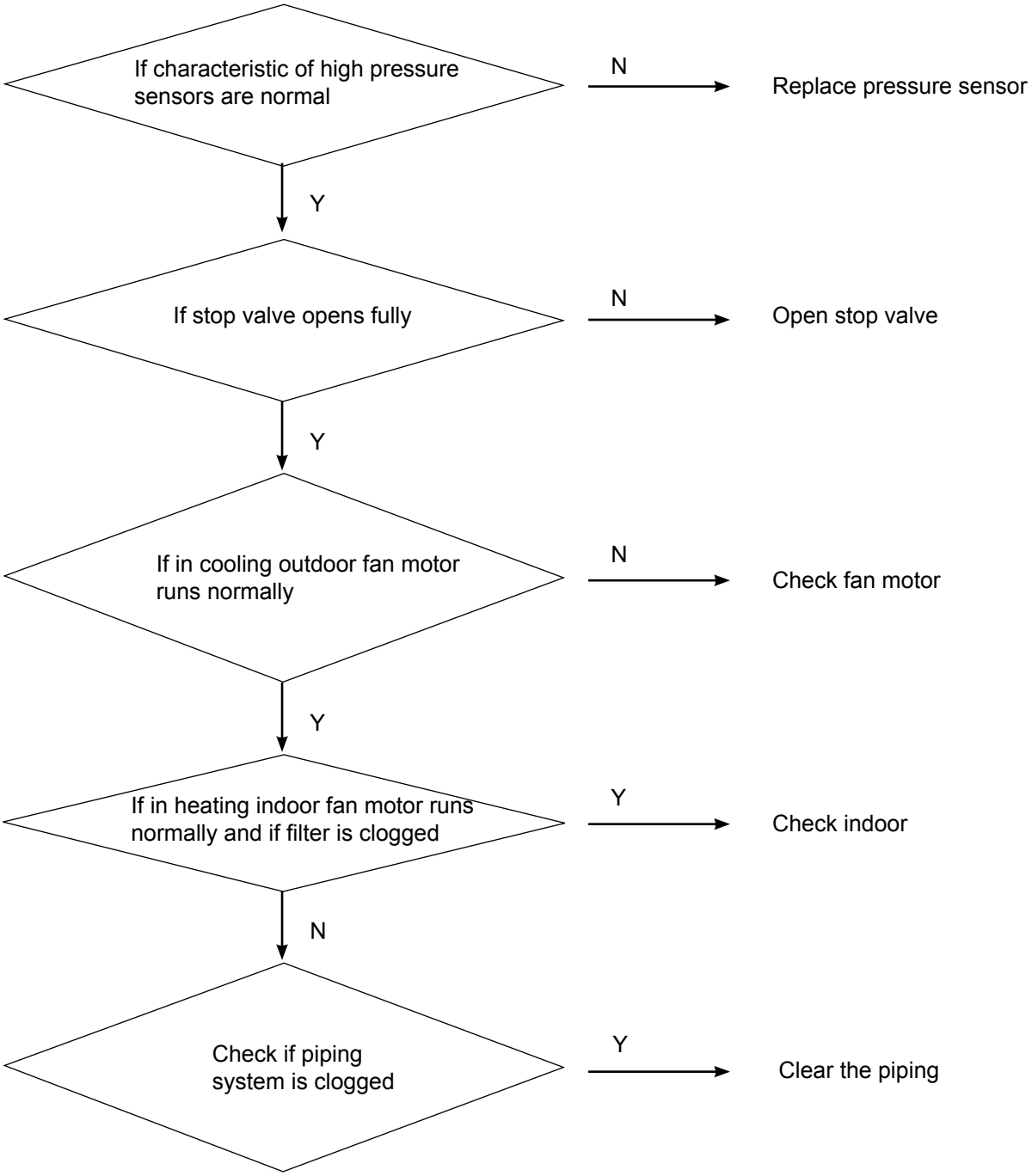

[43] Discharging temp. sensor Td too low protection

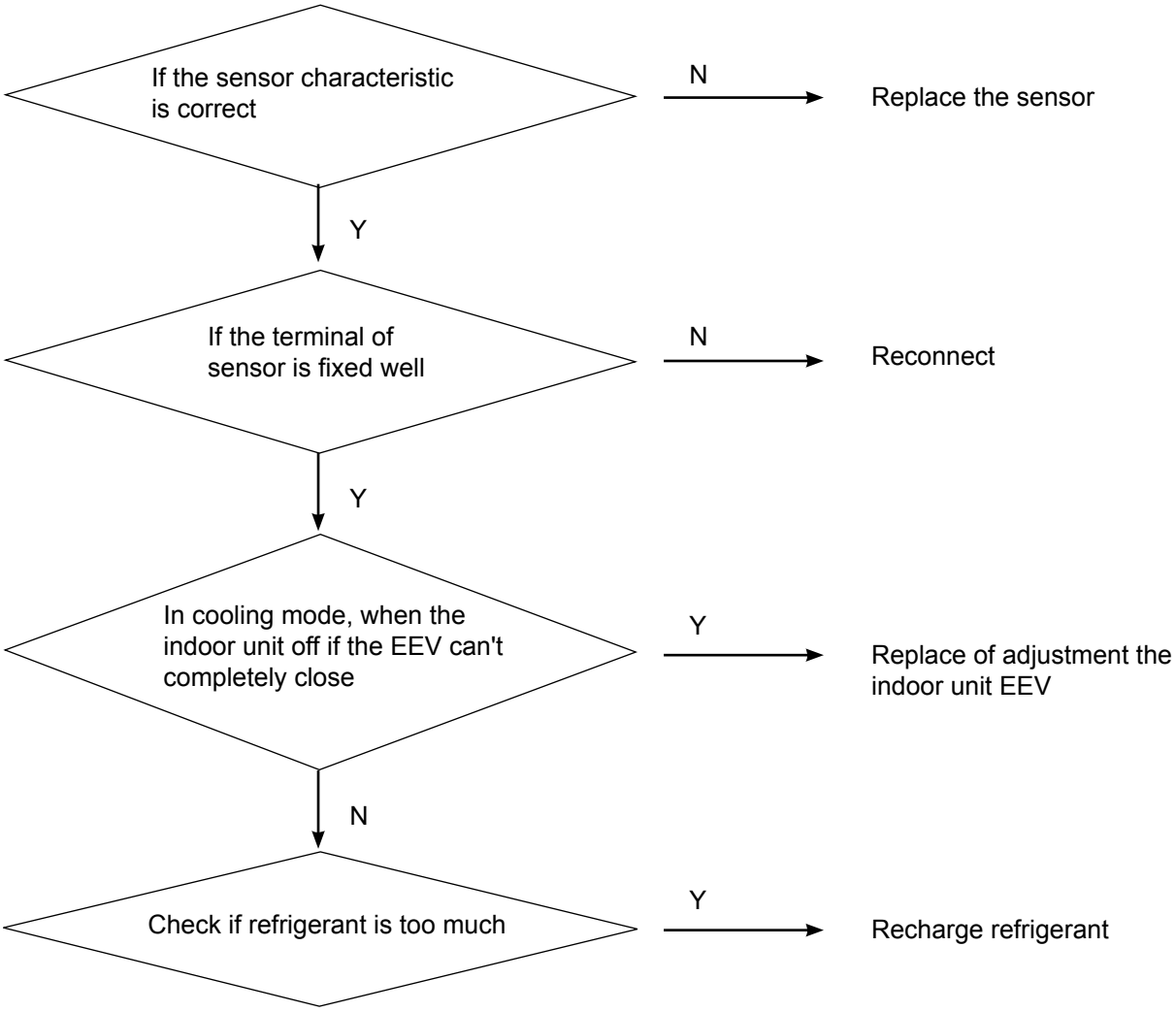

[46] Communication with inverter module failure

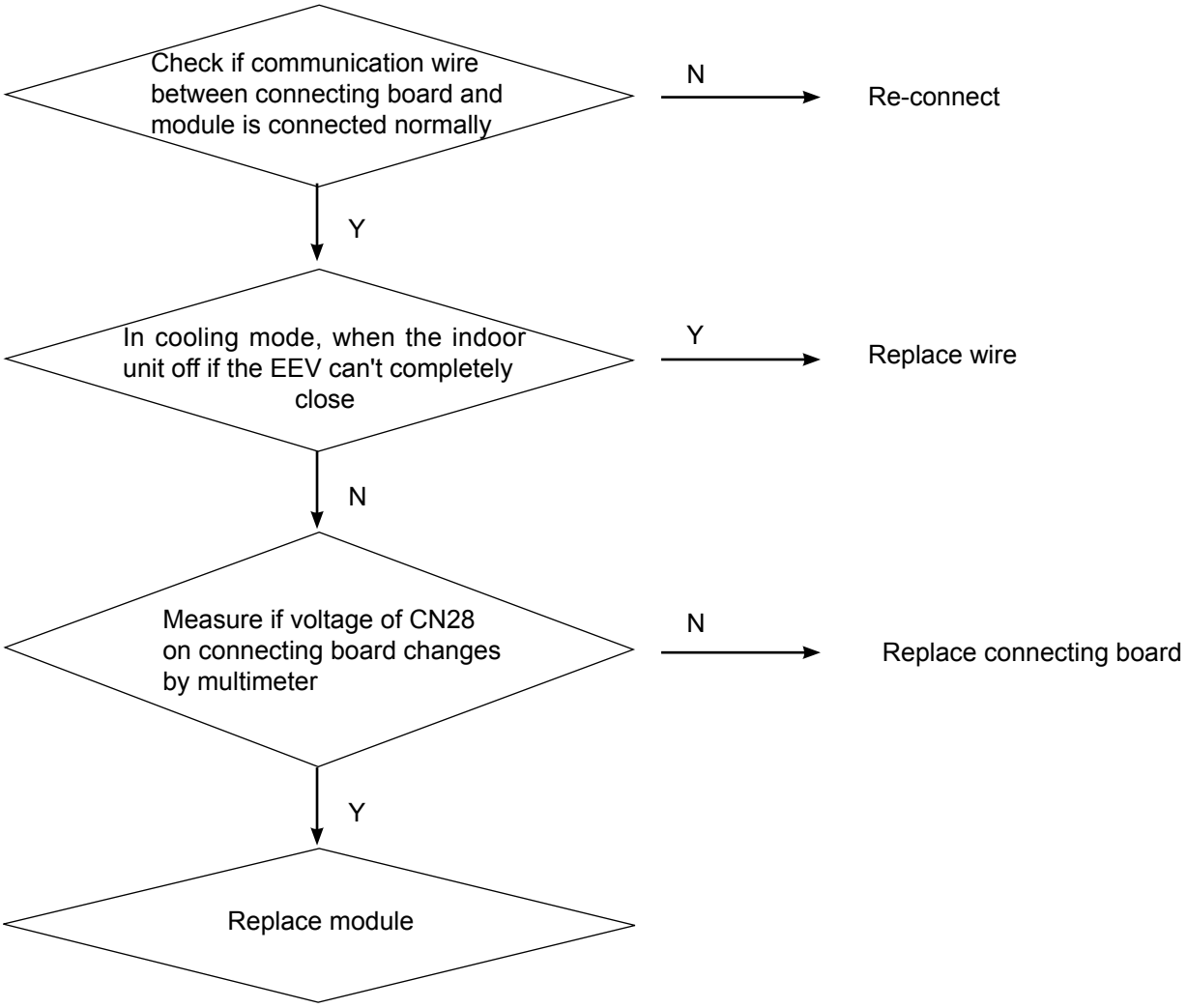

[53] CT Current too low or current sensor failure

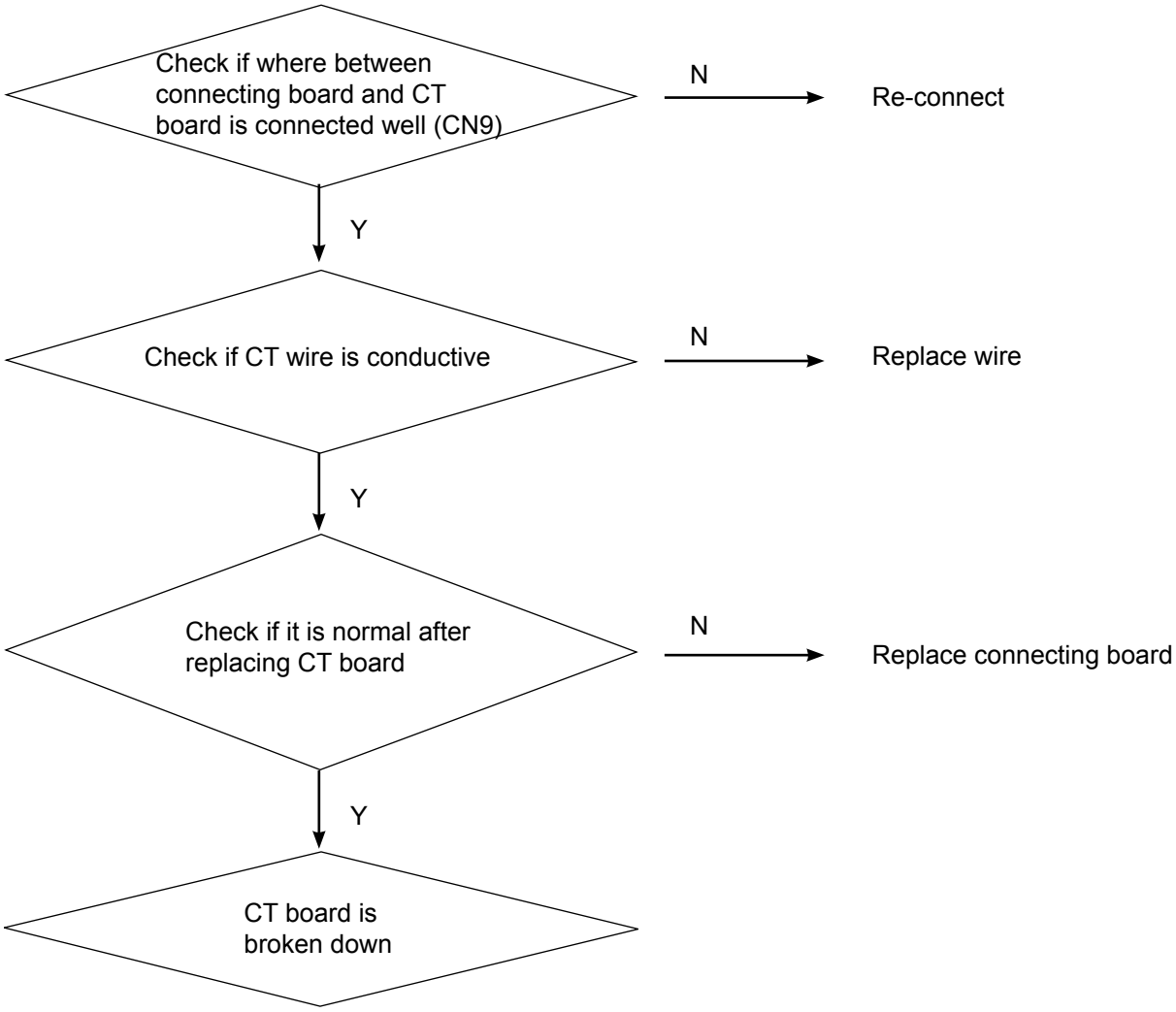

[64] CT current too high

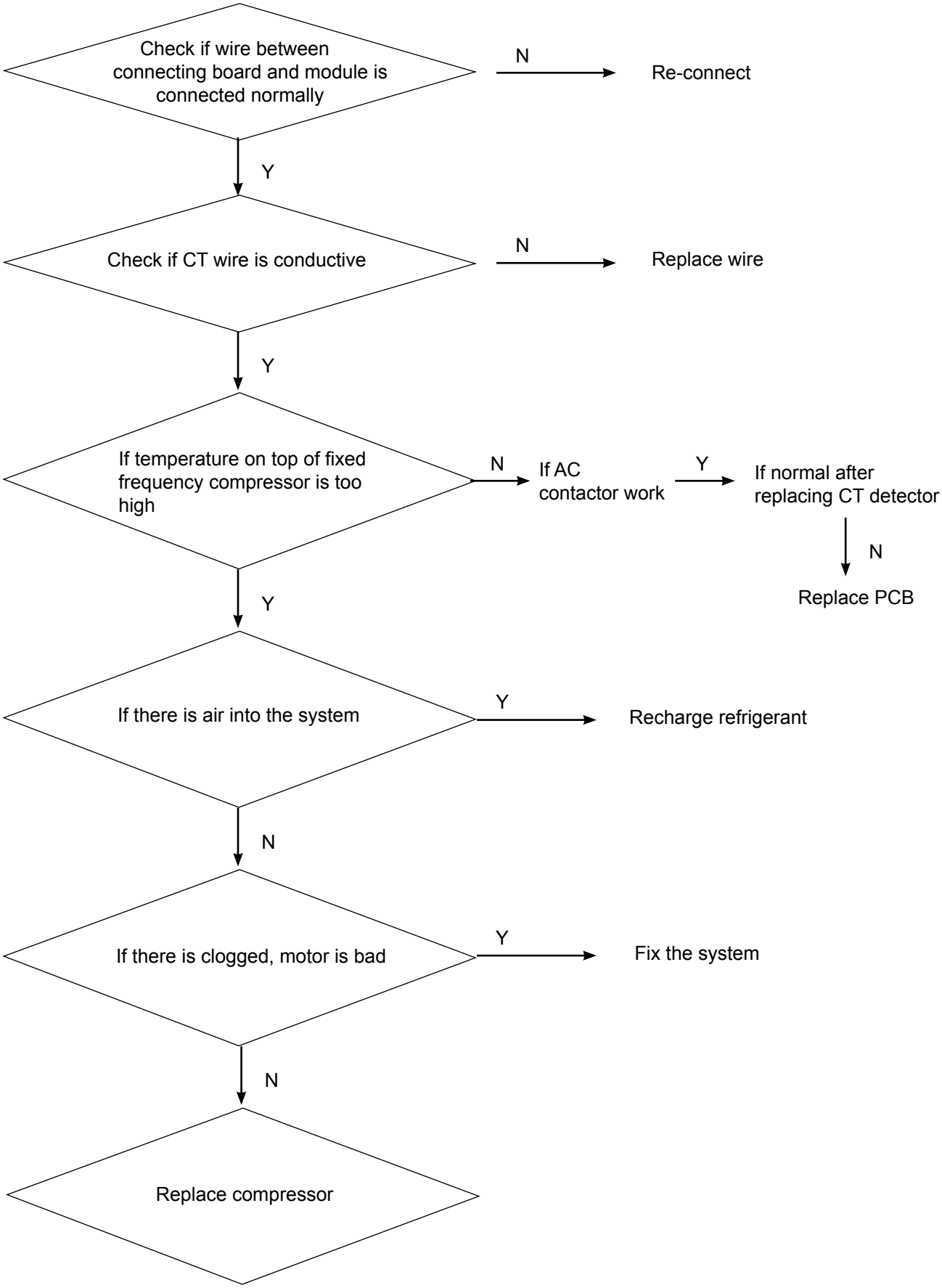

[71-0,71-1 ] DC motor blocked

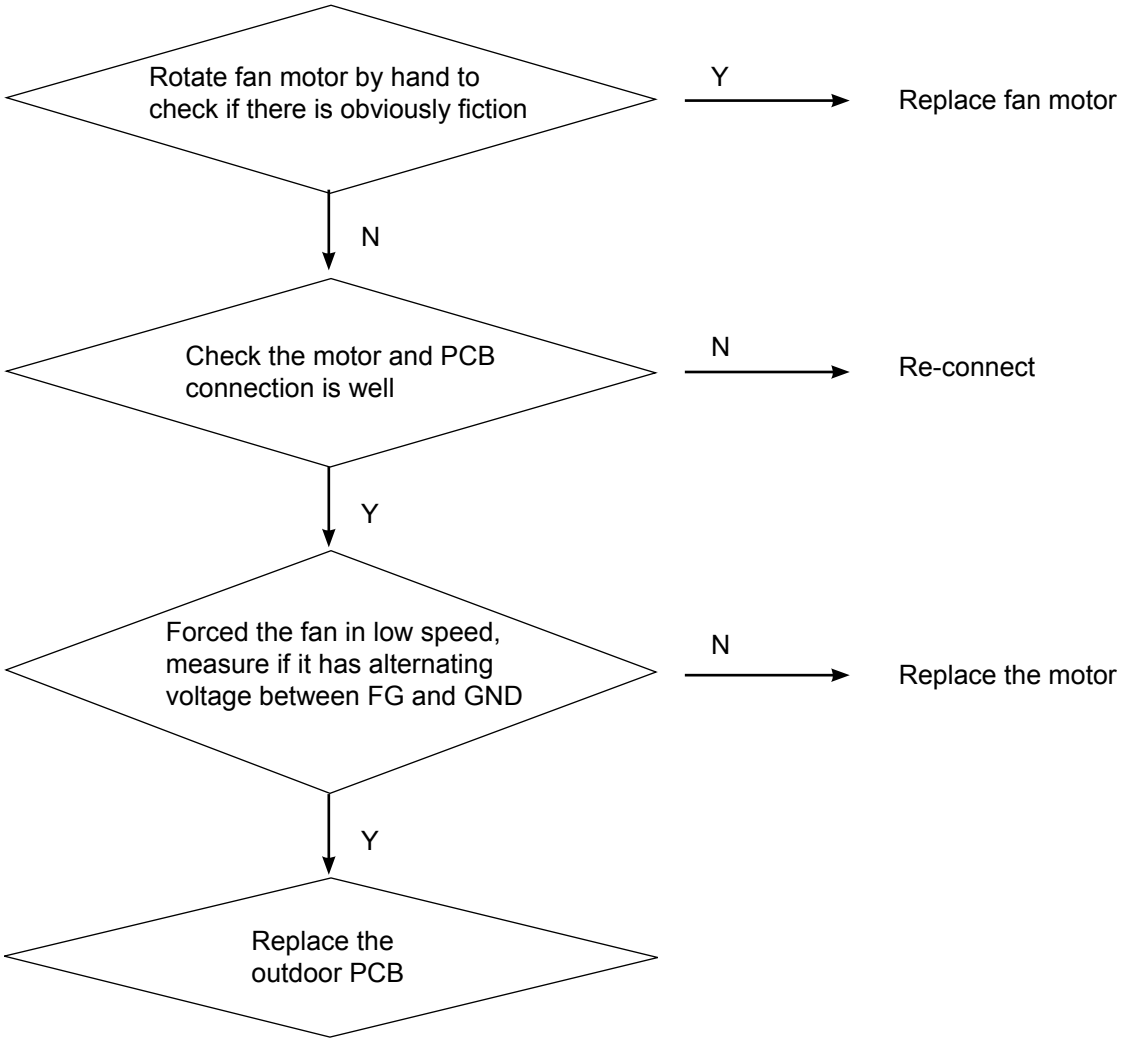

[75-0, 75-4] Pressure difference between high pressure and low pressure is abnorma

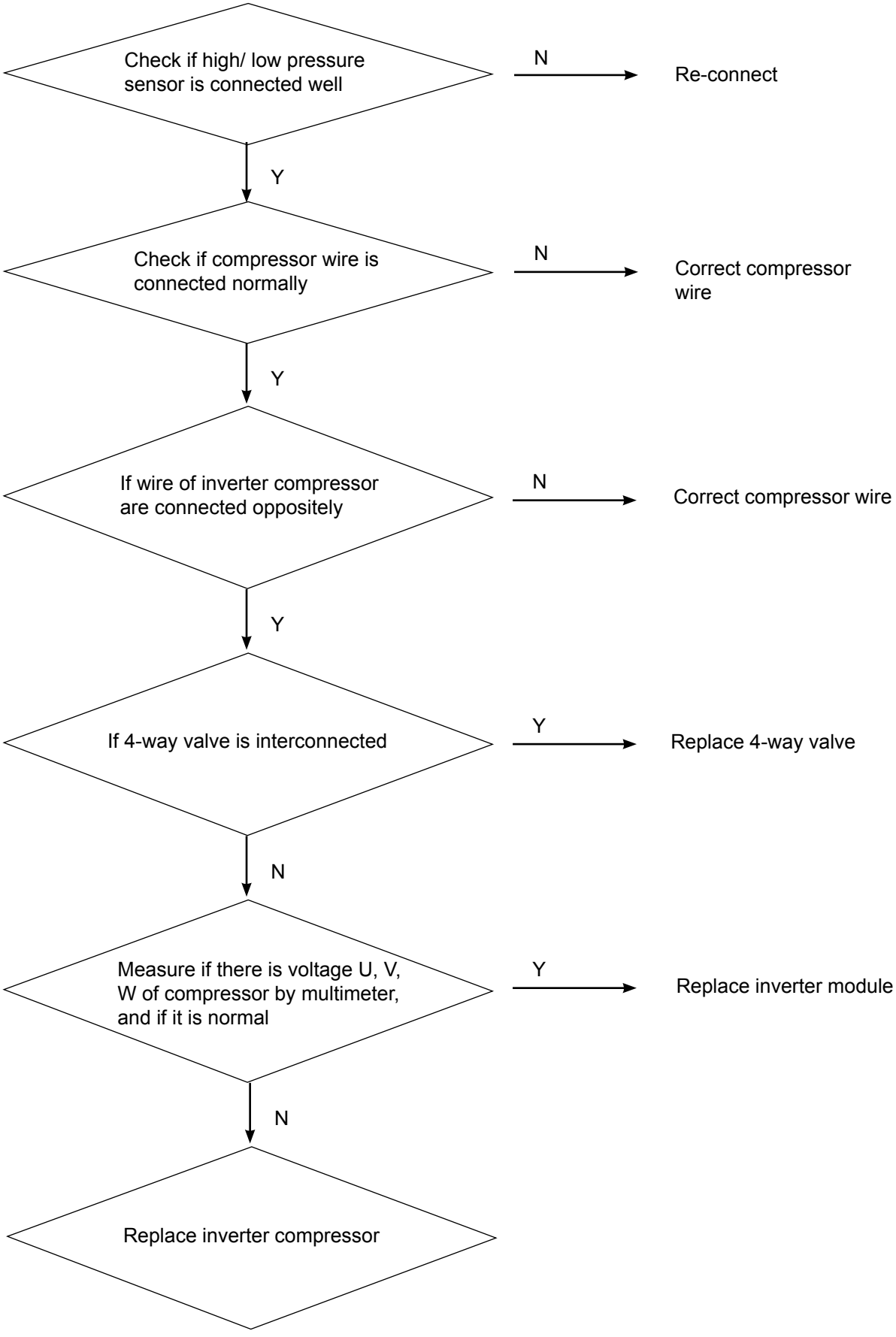

[82] Compressor current protection
[108] Transient over current in IPM module rectifier side software
[110] IPM module hardware over current
[123] Transient over current in IPM module rectifier side hardware

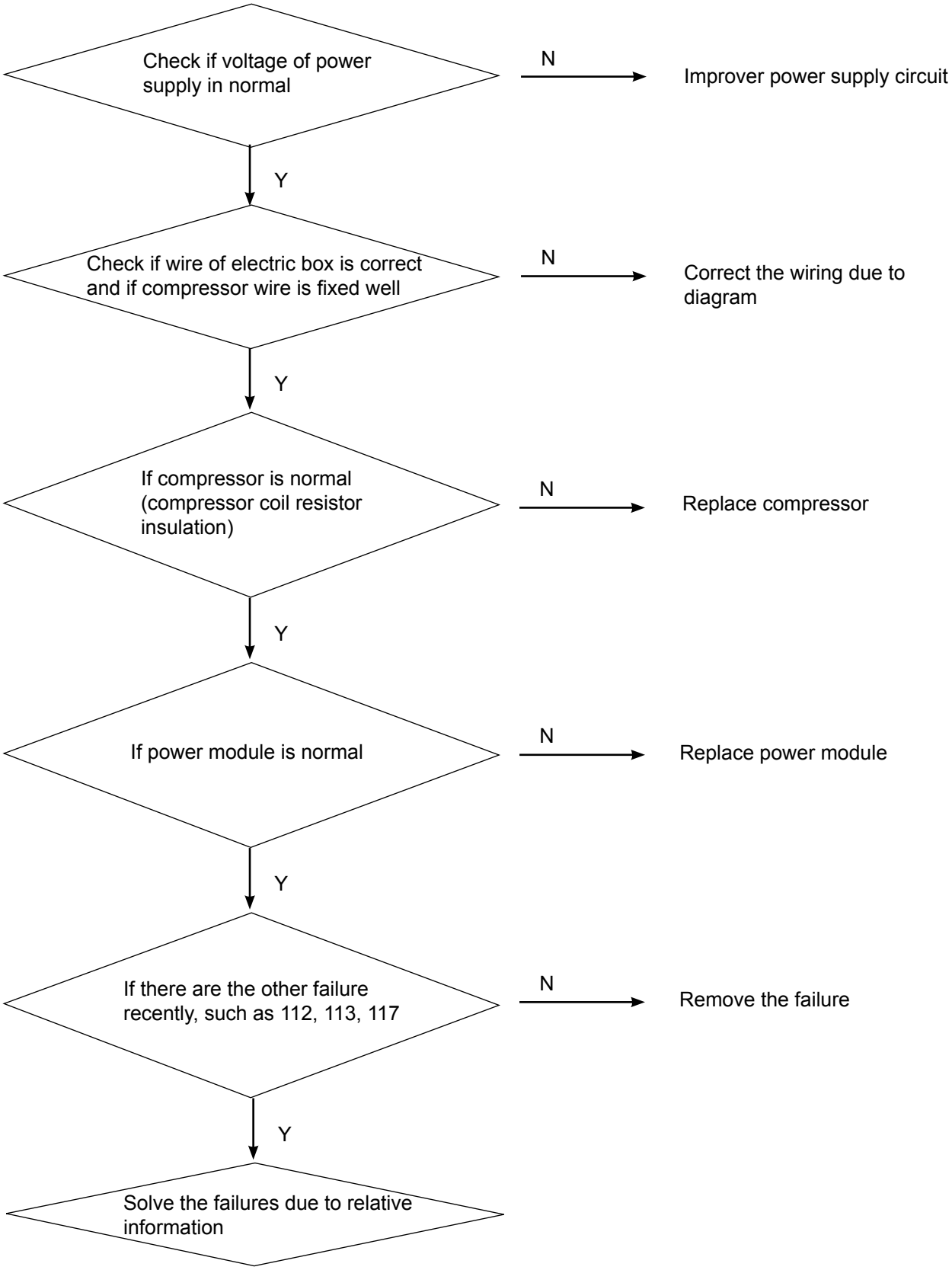

[111] Compressor out of control
[118] The compressor start failure

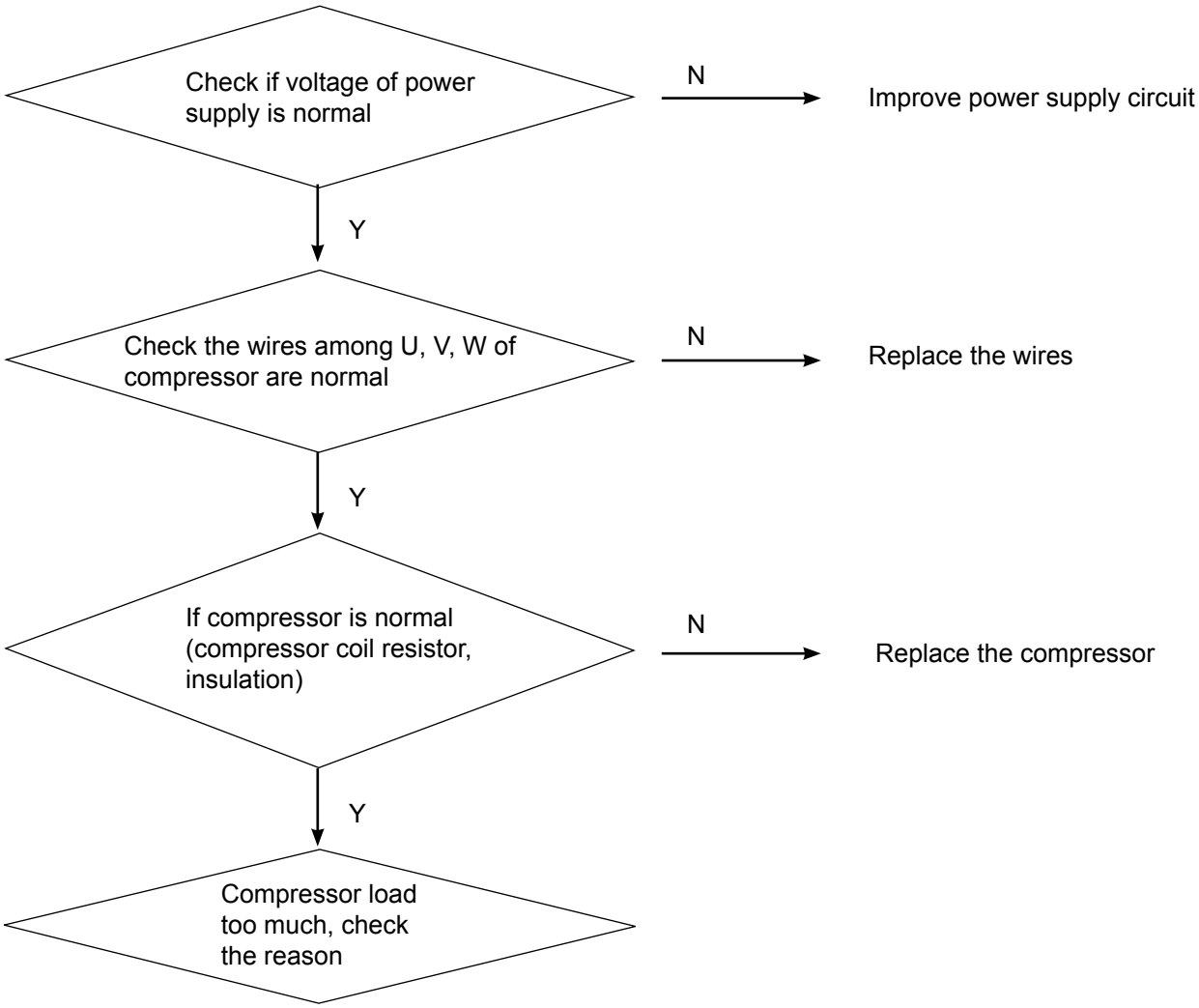

[112] Radiator temp. of transducer too high; [81] IPM module temp. too high

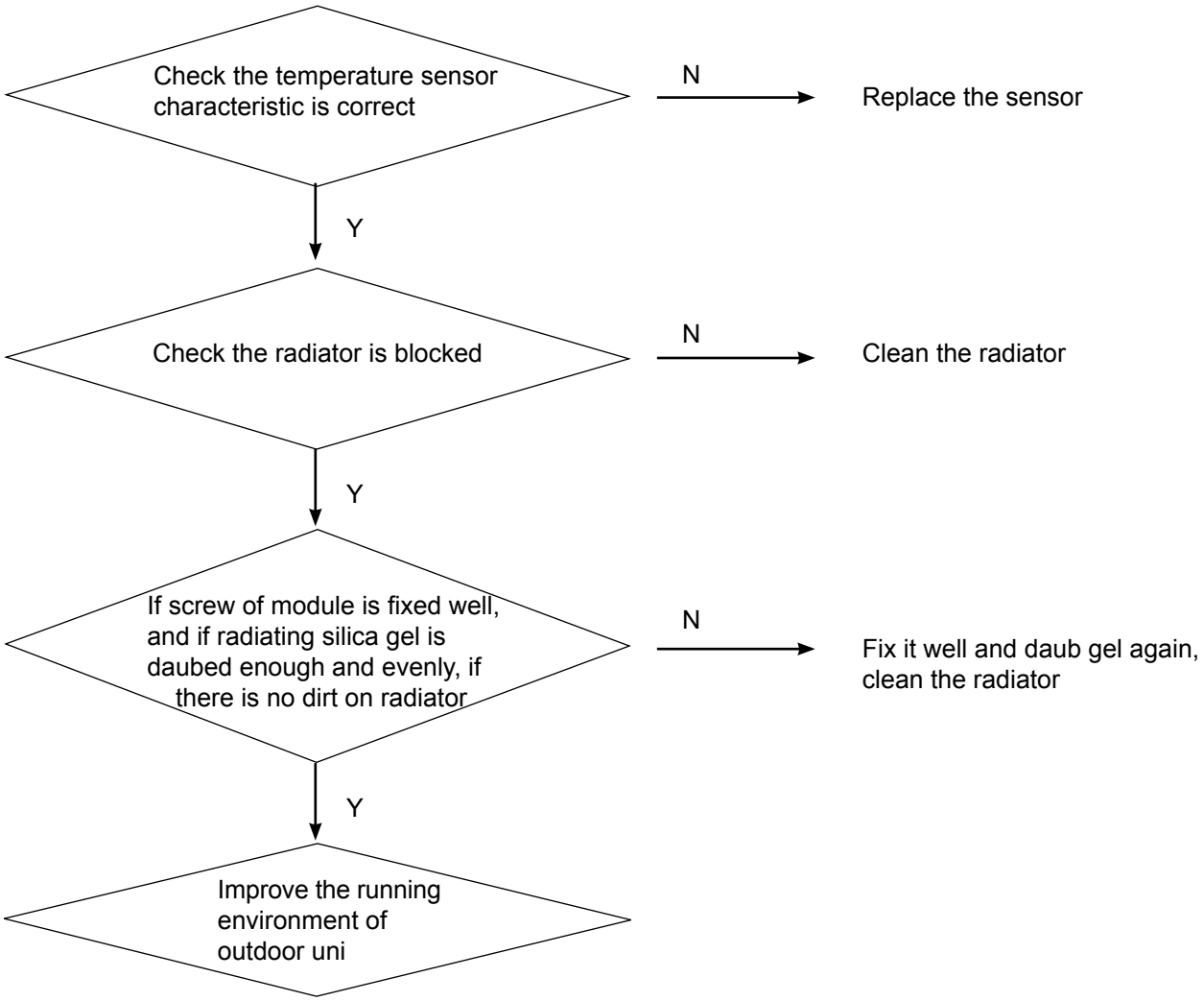

[113] Protection of overload

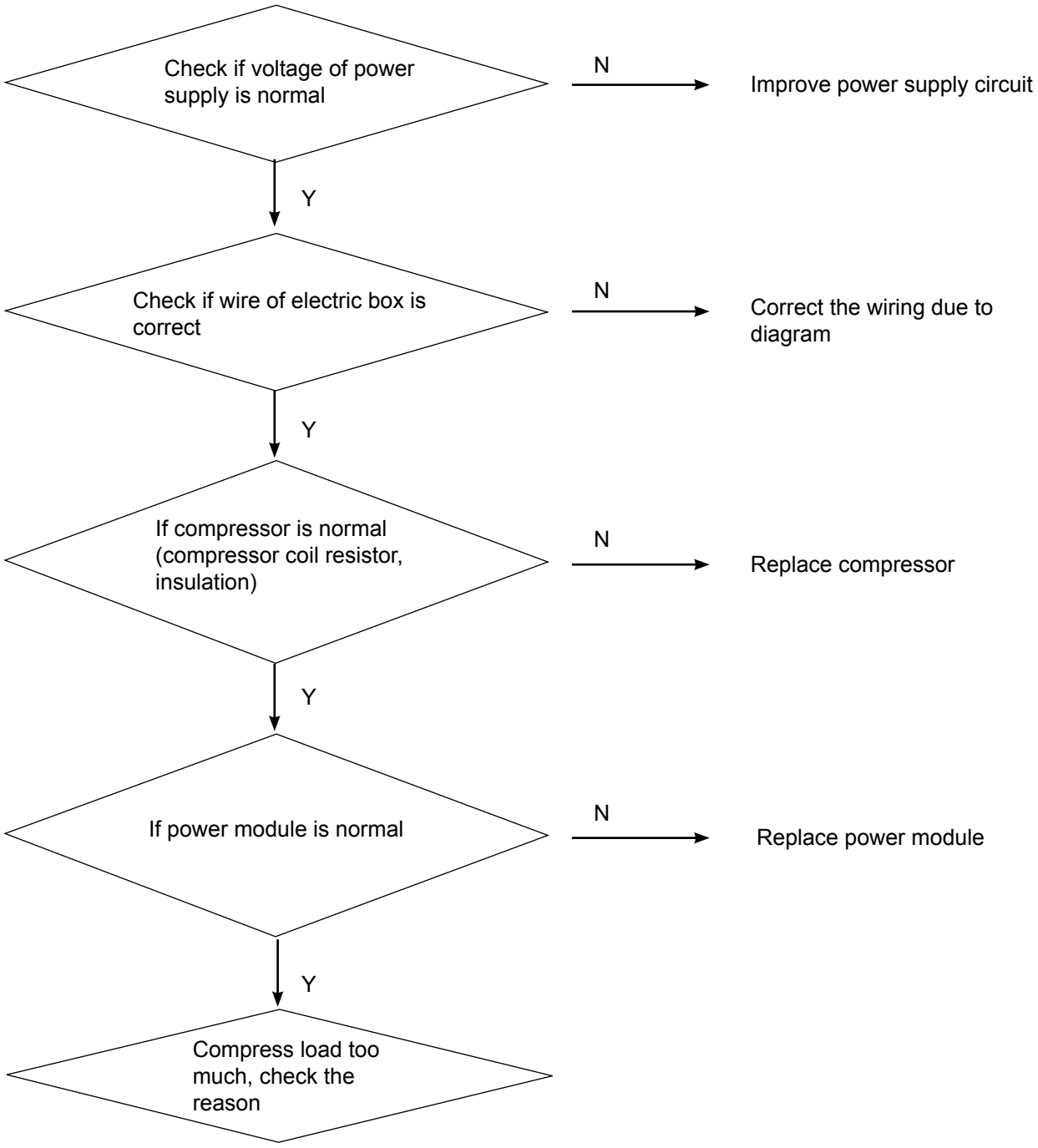

[114] Voltage too low of DC bus line of transducer

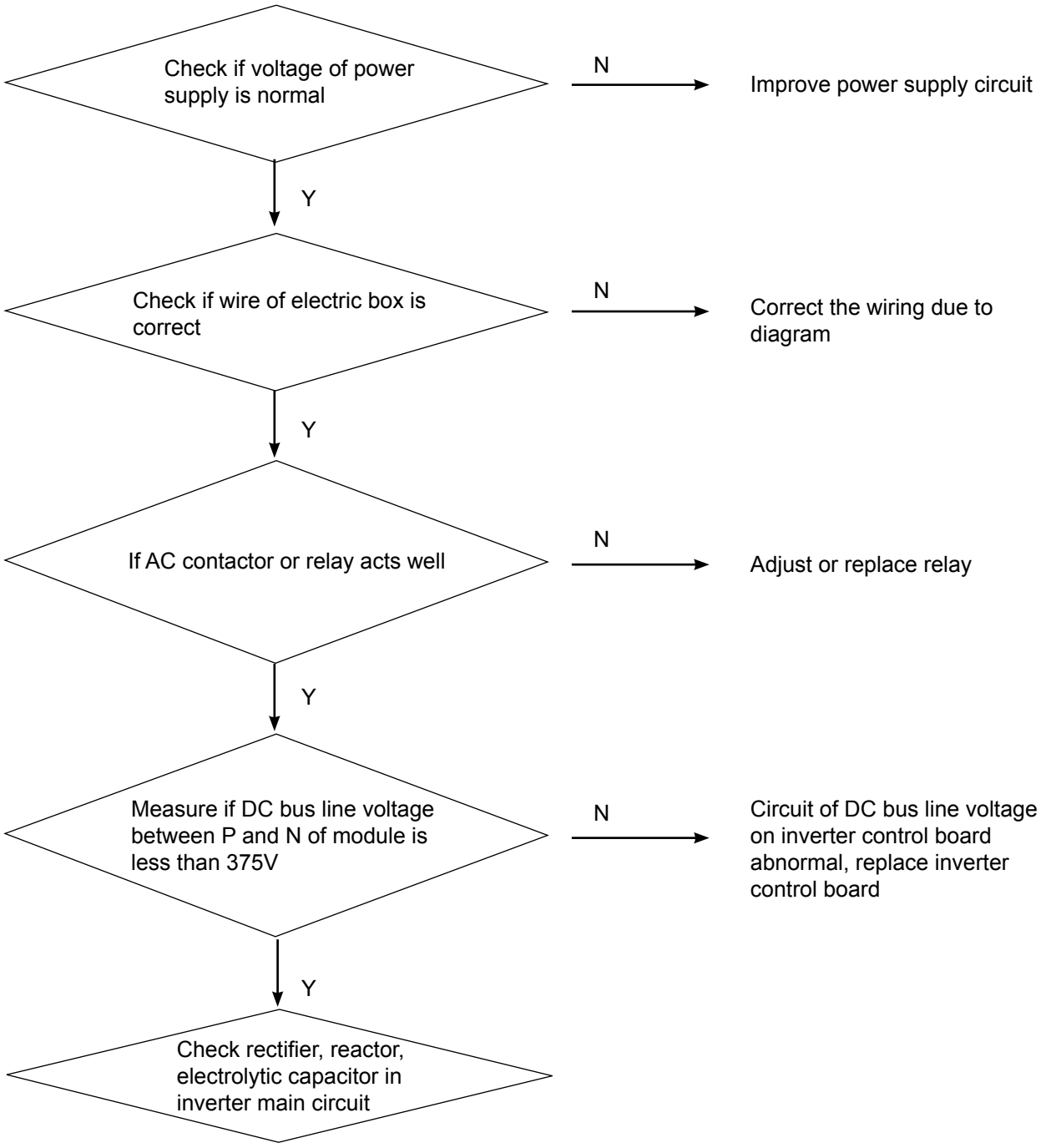

[115] Voltage too high of DC bus line of transducer

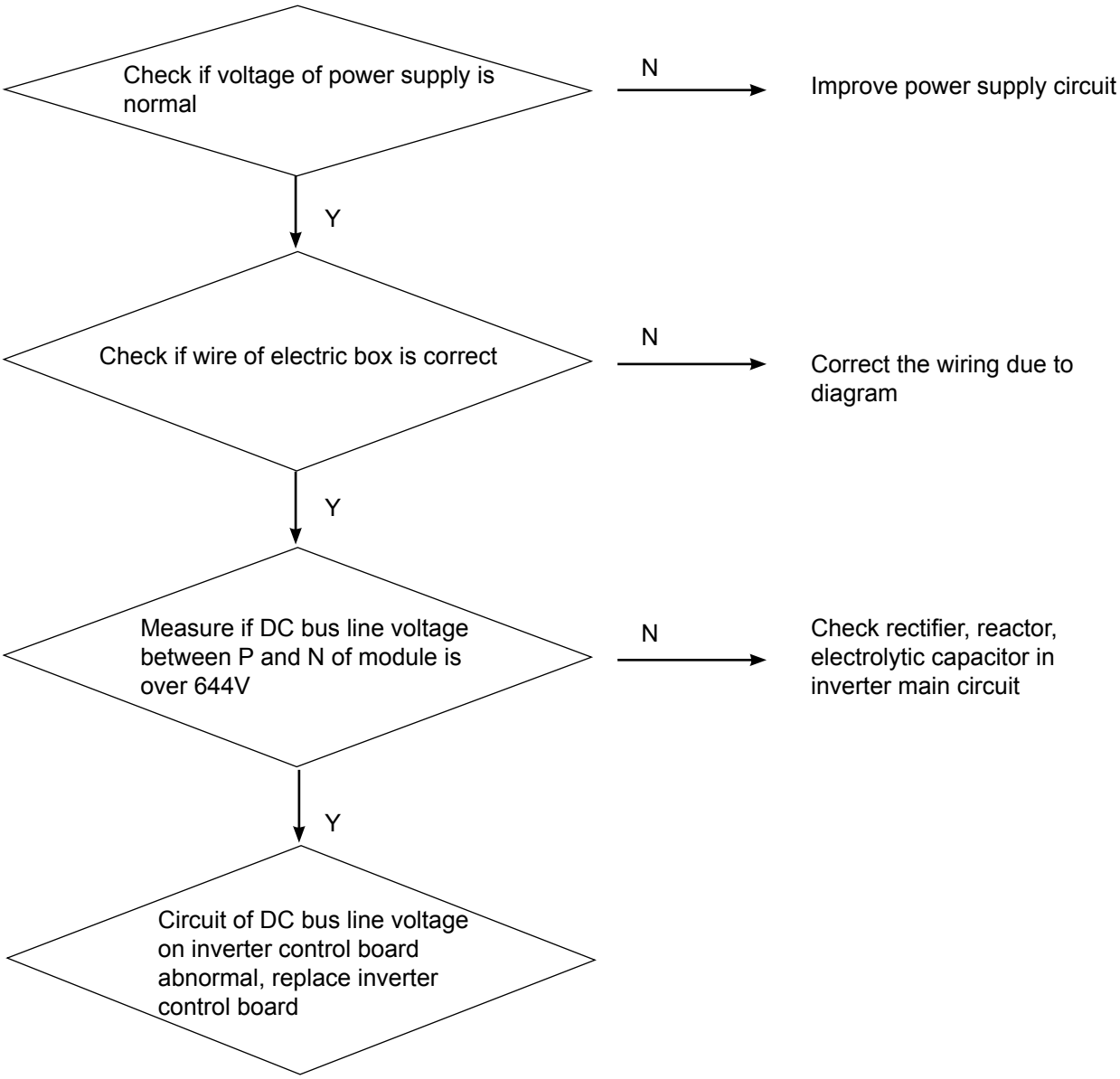

[116] Communication abnormal between transducer (inverter module board) and control PCB

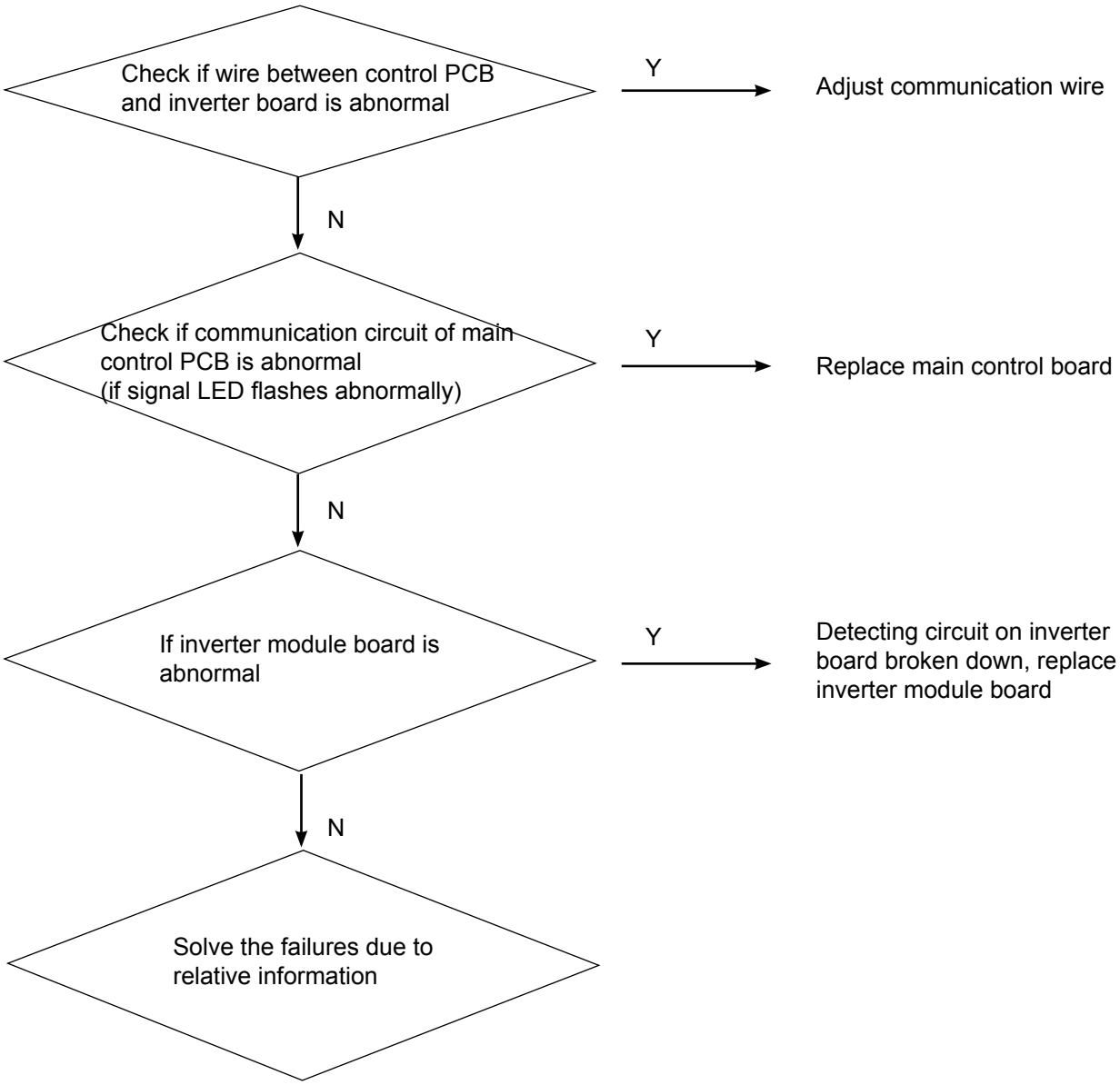

[117] Transducer over current (software protection)

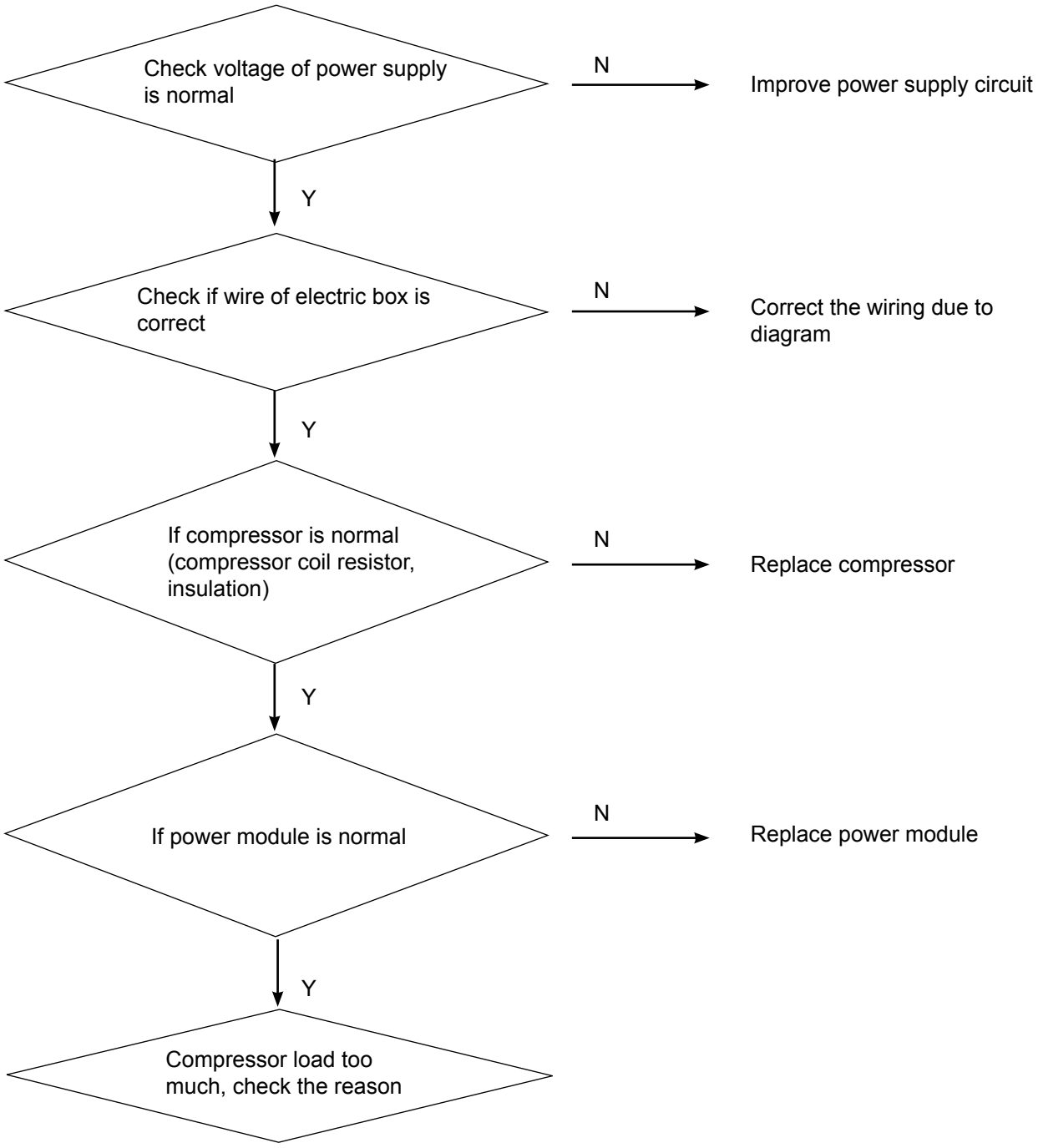

[119] Current detection circuit of transducer is abnormal

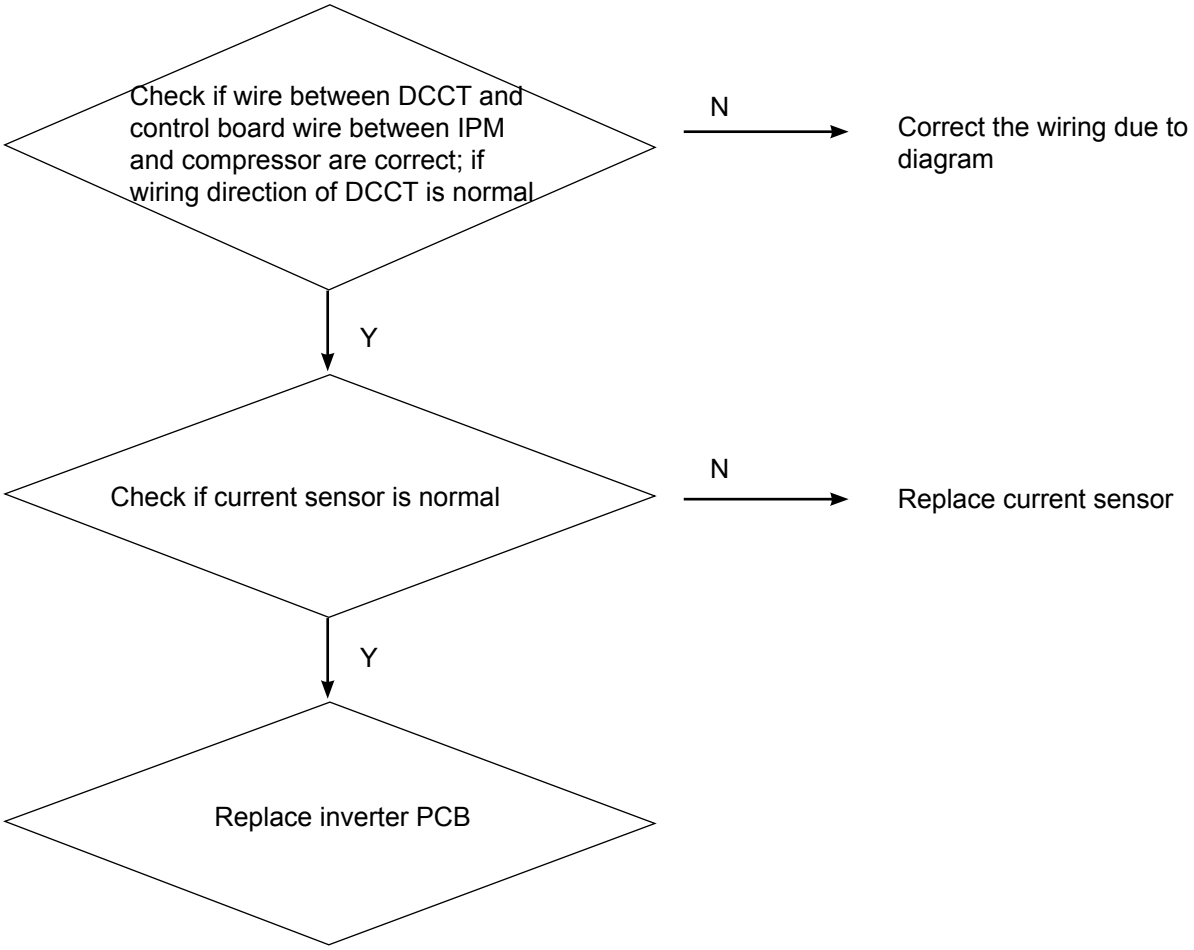

[120] Power supply of transducer abnormal

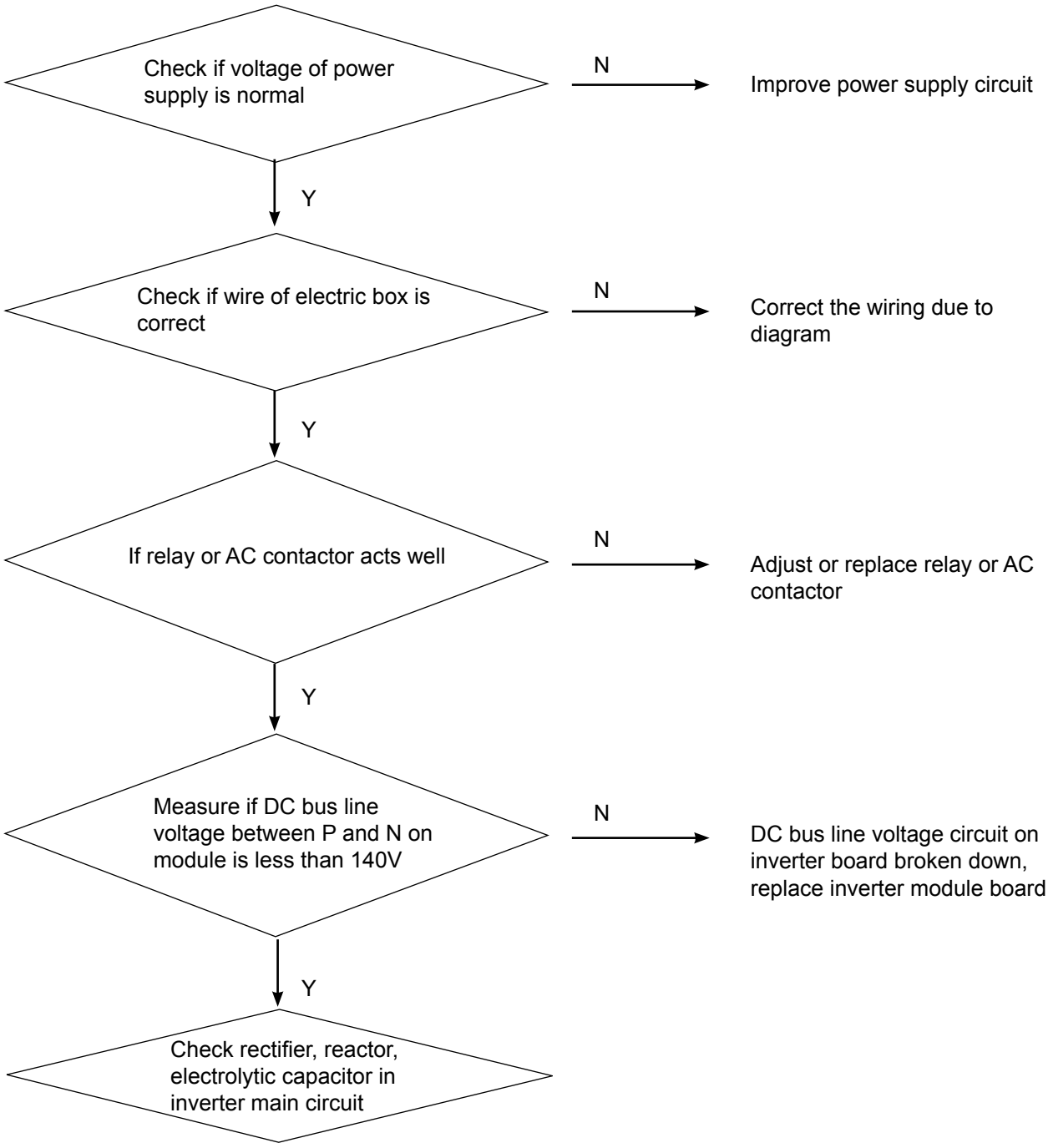

[121] Power supply of inverter board is abnormal

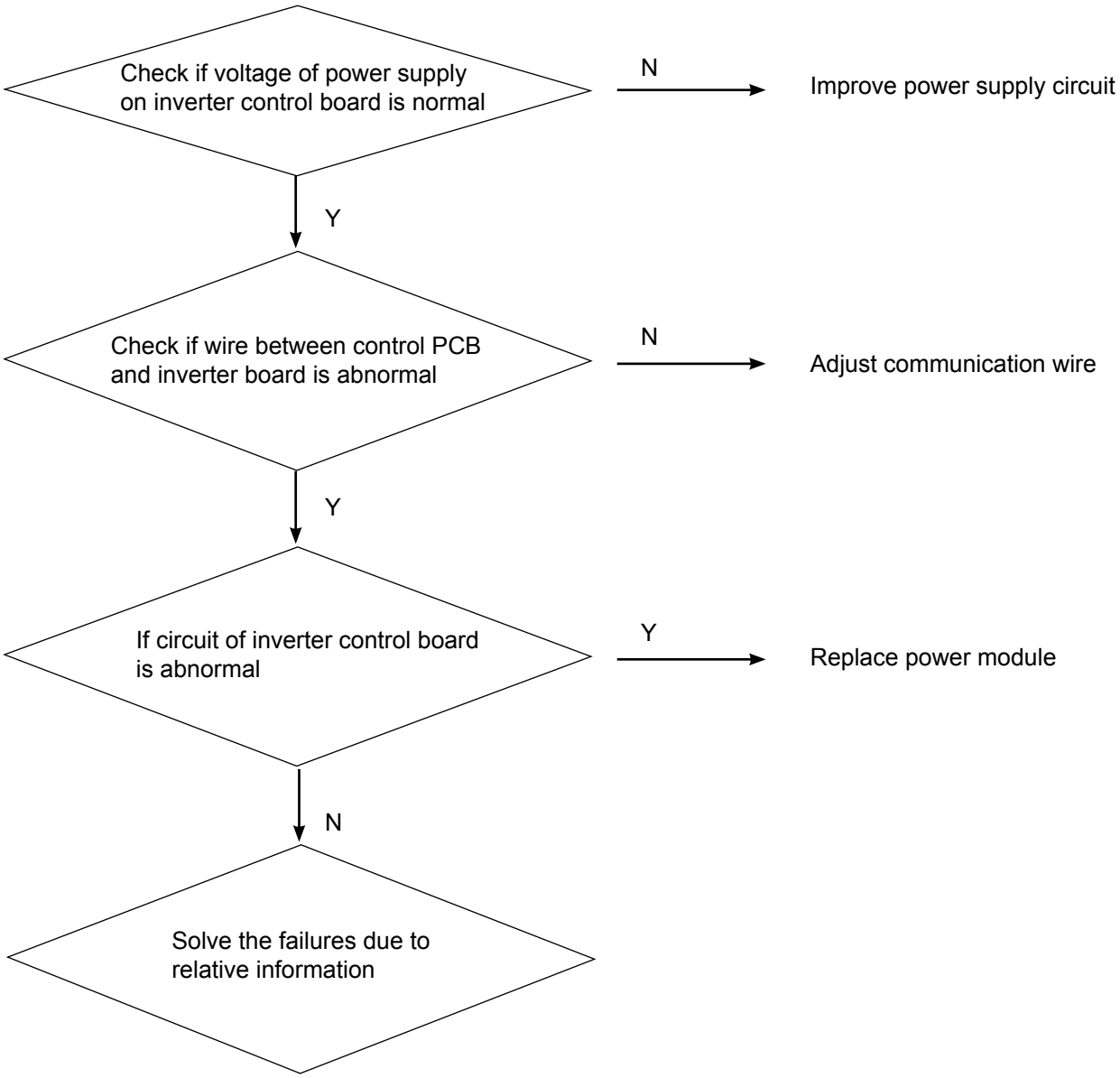

[122] Radiator temp. sensor of transducer abnormal

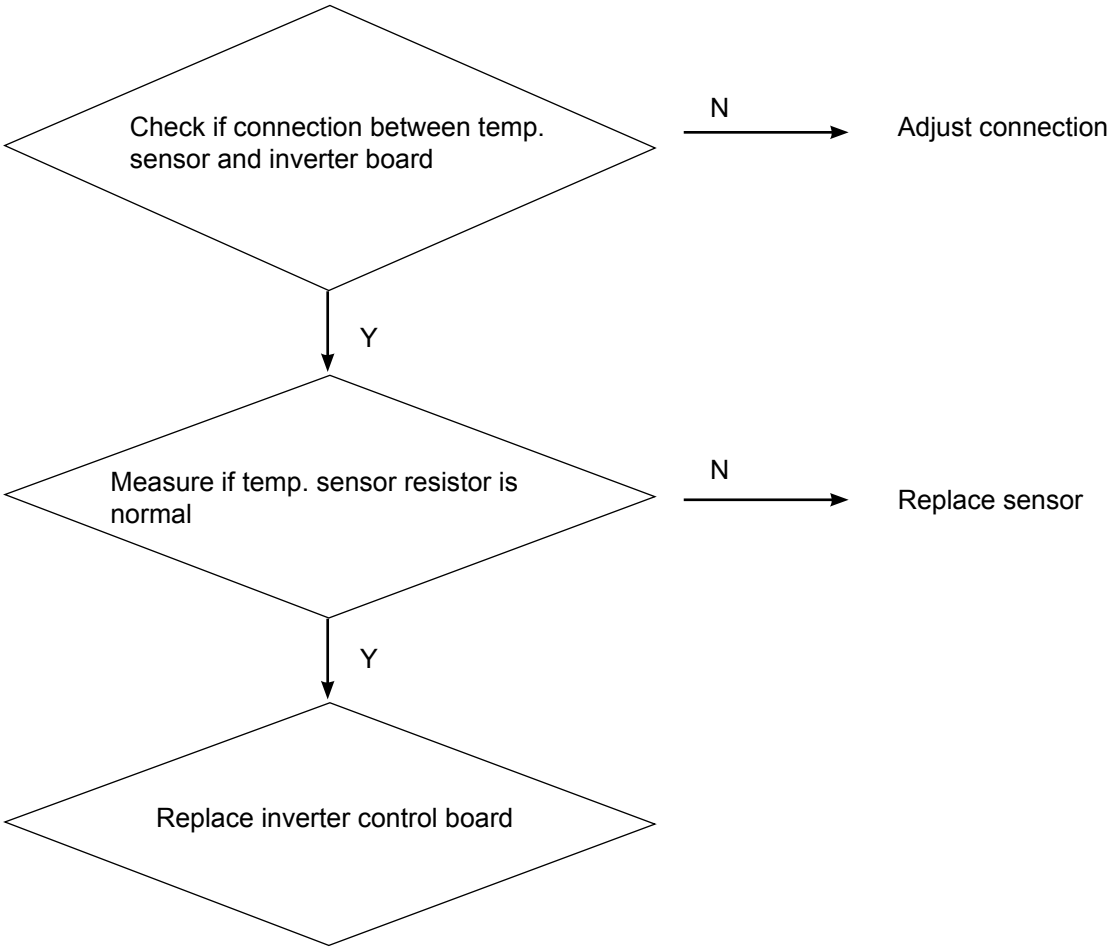

## 22. APPENDIX Sensor Resistance Table

| NO. | Model | Name | Characteristic |
|---|---|---|---|
| 1 | AU082FRCRA(HW)<br>AU112FRCRA(HW)<br>AU162FRCRA(HW) | TAO ambient temp. sensor | R25=10KΩ |
| 2 | | TD compressor discharge temp. sensor | R80=50KΩ |
| 3 | | TE1 defrosting temp. sensor | R25=10KΩ |
| 4 | | TS compressor suction temp. sensor | R25=10KΩ |
| 5 | | THI in refrigerant temp. sensor | R25=10KΩ |
| 6 | | THO out refrigerant temp. sensor | R25=10KΩ |
| 7 | | TWI in water temp. sensor | R25=10KΩ |
| 8 | | TWO out water temp. sensor | R25=10KΩ |

Haier

| R80=50kΩ±3% B25/80=4450K±3% | | | | | |
|---|---|---|---|---|---|
| Temp | Resistance (kΩ) | | | % (Resist. Tol) | |
| (°C) | Rmax | R (t) Normal | Rmin | MAX (+) | MIN (-) |
| 0 | 1749.014 | 1921.993 | 2094.972 | 9 | 9 |
| 1 | 1651.431 | 1813.265 | 1975.099 | 8.93 | 8.93 |
| 2 | 1560.165 | 1711.646 | 1863.127 | 8.85 | 8.85 |
| 3 | 1474.737 | 1616.593 | 1758.449 | 8.78 | 8.78 |
| 4 | 1394.709 | 1527.611 | 1660.513 | 8.7 | 8.7 |
| 5 | 1319.683 | 1444.25 | 1568.817 | 8.63 | 8.63 |
| 6 | 1249.295 | 1366.096 | 1482.897 | 8.55 | 8.55 |
| 7 | 1183.21 | 1292.773 | 1402.336 | 8.48 | 8.48 |
| 8 | 1121.124 | 1223.935 | 1326.746 | 8.4 | 8.4 |
| 9 | 1062.756 | 1159.265 | 1255.774 | 8.33 | 8.33 |
| 10 | 1007.85 | 1098.474 | 1189.098 | 8.25 | 8.25 |
| 11 | 956.167 | 1041.293 | 1126.419 | 8.18 | 8.18 |
| 12 | 907.491 | 987.477 | 1067.463 | 8.1 | 8.1 |
| 13 | 861.621 | 936.799 | 1011.977 | 8.03 | 8.03 |
| 14 | 818.372 | 889.052 | 959.732 | 7.95 | 7.95 |
| 15 | 777.574 | 844.042 | 910.51 | 7.88 | 7.88 |
| 16 | 739.066 | 801.59 | 864.114 | 7.8 | 7.8 |
| 17 | 702.705 | 761.533 | 820.361 | 7.73 | 7.73 |
| 18 | 668.353 | 723.717 | 779.081 | 7.65 | 7.65 |
| 19 | 635.885 | 688.001 | 740.117 | 7.58 | 7.58 |
| 20 | 605.185 | 654.254 | 703.323 | 7.5 | 7.5 |
| 21 | 576.145 | 622.355 | 668.565 | 7.43 | 7.43 |
| 22 | 548.663 | 592.189 | 635.715 | 7.35 | 7.35 |
| 23 | 522.645 | 563.651 | 604.657 | 7.28 | 7.28 |
| 24 | 498.006 | 536.644 | 575.282 | 7.2 | 7.2 |
| 25 | 474.662 | 511.076 | 547.49 | 7.13 | 7.13 |
| 26 | 452.538 | 486.862 | 521.186 | 7.05 | 7.05 |
| 27 | 431.563 | 463.922 | 496.281 | 6.98 | 6.98 |
| 28 | 411.671 | 442.182 | 472.693 | 6.9 | 6.9 |
| 29 | 392.8 | 421.572 | 450.344 | 6.83 | 6.83 |
| 30 | 374.891 | 402.028 | 429.165 | 6.75 | 6.75 |
| 31 | 357.891 | 383.489 | 409.087 | 6.68 | 6.68 |
| 32 | 341.749 | 365.898 | 390.047 | 6.6 | 6.6 |
| 33 | 326.416 | 349.201 | 371.986 | 6.53 | 6.53 |
| 34 | 311.848 | 333.349 | 354.85 | 6.45 | 6.45 |
| 35 | 298.004 | 318.295 | 338.586 | 6.38 | 6.38 |
| 36 | 284.843 | 303.995 | 323.147 | 6.3 | 6.3 |

| R80=50kΩ±3% B25/80=4450K±3% | | | | | |
|---|---|---|---|---|---|
| Temp | Resistance (kΩ) | | | % (Resist. Tol) | |
| (°C) | Rmax | R (t) Normal | Rmin | MAX (+) | MIN (-) |
| 37 | 272.329 | 290.407 | 308.485 | 6.23 | 6.23 |
| 38 | 260.427 | 277.493 | 294.559 | 6.15 | 6.15 |
| 39 | 249.104 | 265.216 | 281.328 | 6.08 | 6.08 |
| 40 | 238.329 | 253.541 | 268.753 | 6 | 6 |
| 41 | 228.073 | 242.437 | 256.801 | 5.93 | 5.93 |
| 42 | 218.308 | 231.873 | 245.438 | 5.85 | 5.85 |
| 43 | 209.01 | 221.82 | 234.63 | 5.78 | 5.78 |
| 44 | 200.154 | 212.252 | 224.35 | 5.7 | 5.7 |
| 45 | 191.715 | 203.142 | 214.569 | 5.63 | 5.63 |
| 46 | 183.674 | 194.467 | 205.26 | 5.55 | 5.55 |
| 47 | 176.009 | 186.204 | 196.399 | 5.48 | 5.48 |
| 48 | 168.703 | 178.333 | 187.963 | 5.4 | 5.4 |
| 49 | 161.735 | 170.832 | 179.929 | 5.33 | 5.33 |
| 50 | 155.089 | 163.682 | 172.275 | 5.25 | 5.25 |
| 51 | 148.748 | 156.866 | 164.984 | 5.18 | 5.18 |
| 52 | 142.698 | 150.367 | 158.036 | 5.1 | 5.1 |
| 53 | 136.924 | 144.168 | 151.412 | 5.03 | 5.03 |
| 54 | 131.411 | 138.255 | 145.099 | 4.95 | 4.95 |
| 55 | 126.148 | 132.613 | 139.078 | 4.88 | 4.88 |
| 56 | 121.122 | 127.229 | 133.336 | 4.8 | 4.8 |
| 57 | 116.32 | 122.089 | 127.858 | 4.73 | 4.73 |
| 58 | 111.732 | 117.181 | 122.63 | 4.65 | 4.65 |
| 59 | 107.347 | 112.494 | 117.641 | 4.58 | 4.58 |
| 60 | 103.157 | 108.018 | 112.879 | 4.5 | 4.5 |
| 61 | 99.15 | 103.741 | 108.332 | 4.43 | 4.43 |
| 62 | 95.319 | 99.654 | 103.989 | 4.35 | 4.35 |
| 63 | 91.655 | 95.748 | 99.841 | 4.28 | 4.28 |
| 64 | 88.149 | 92.014 | 95.879 | 4.2 | 4.2 |
| 65 | 84.795 | 88.443 | 92.091 | 4.13 | 4.13 |
| 66 | 81.584 | 85.028 | 88.472 | 4.05 | 4.05 |
| 67 | 78.511 | 81.761 | 85.011 | 3.98 | 3.98 |
| 68 | 75.569 | 78.636 | 81.703 | 3.9 | 3.9 |
| 69 | 72.752 | 75.645 | 78.538 | 3.83 | 3.83 |
| 70 | 70.052 | 72.781 | 75.51 | 3.75 | 3.75 |
| 71 | 67.466 | 70.04 | 72.614 | 3.68 | 3.68 |

| R80=50kΩ±3% B25/80=4450K±3% | | | | | |
|---|---|---|---|---|---|
| Temp | Resistance (kΩ) | | | % (Resist. Tol) | |
| (°C) | Rmax | R (t) Normal | Rmin | MAX (+) | MIN (-) |
| 72 | 64.988 | 67.415 | 69.842 | 3.6 | 3.6 |
| 73 | 62.613 | 64.901 | 67.189 | 3.53 | 3.53 |
| 74 | 60.337 | 62.493 | 64.649 | 3.45 | 3.45 |
| 75 | 58.154 | 60.185 | 62.216 | 3.38 | 3.38 |
| 76 | 56.06 | 57.973 | 59.886 | 3.3 | 3.3 |
| 77 | 54.051 | 55.852 | 57.653 | 3.23 | 3.23 |
| 78 | 52.125 | 53.82 | 55.515 | 3.15 | 3.15 |
| 79 | 50.275 | 51.87 | 53.465 | 3.08 | 3.08 |
| 80 | 48.5 | 50 | 51.5 | 3 | 3 |
| 81 | 46.728 | 48.206 | 49.684 | 3.07 | 3.07 |
| 82 | 45.028 | 46.484 | 47.94 | 3.13 | 3.13 |
| 83 | 43.397 | 44.832 | 46.267 | 3.2 | 3.2 |
| 84 | 41.833 | 43.246 | 44.659 | 3.27 | 3.27 |
| 85 | 40.332 | 41.723 | 43.114 | 3.33 | 3.33 |
| 86 | 38.891 | 40.26 | 41.629 | 3.4 | 3.4 |
| 87 | 37.509 | 38.856 | 40.203 | 3.47 | 3.47 |
| 88 | 36.181 | 37.506 | 38.831 | 3.53 | 3.53 |
| 89 | 34.905 | 36.209 | 37.513 | 3.6 | 3.6 |
| 90 | 33.68 | 34.962 | 36.244 | 3.67 | 3.67 |
| 91 | 32.503 | 33.764 | 35.025 | 3.73 | 3.73 |
| 92 | 31.373 | 32.612 | 33.851 | 3.8 | 3.8 |
| 93 | 30.286 | 31.504 | 32.722 | 3.87 | 3.87 |
| 94 | 29.242 | 30.439 | 31.636 | 3.93 | 3.93 |
| 95 | 28.236 | 29.413 | 30.59 | 4 | 4 |
| 96 | 27.271 | 28.427 | 29.583 | 4.07 | 4.07 |
| 97 | 26.342 | 27.478 | 28.614 | 4.13 | 4.13 |
| 98 | 25.448 | 26.564 | 27.68 | 4.2 | 4.2 |
| 99 | 24.589 | 25.685 | 26.781 | 4.27 | 4.27 |
| 100 | 23.762 | 24.838 | 25.914 | 4.33 | 4.33 |
| 101 | 22.966 | 24.023 | 25.08 | 4.4 | 4.4 |
| 102 | 22.199 | 23.237 | 24.275 | 4.47 | 4.47 |
| 103 | 21.462 | 22.481 | 23.5 | 4.53 | 4.53 |
| 104 | 20.751 | 21.752 | 22.753 | 4.6 | 4.6 |

| R80=50kΩ±3% B25/80=4450K±3% | | | | | |
|---|---|---|---|---|---|
| Temp | Resistance (kΩ) | | | % (Resist. Tol) | |
| (°C) | Rmax | R (t) Normal | Rmin | MAX (+) | MIN (-) |
| 105 | 20.067 | 21.049 | 22.031 | 4.67 | 4.67 |
| 106 | 19.408 | 20.372 | 21.336 | 4.73 | 4.73 |
| 107 | 18.773 | 19.72 | 20.667 | 4.8 | 4.8 |
| 108 | 18.162 | 19.091 | 20.02 | 4.87 | 4.87 |
| 109 | 17.573 | 18.485 | 19.397 | 4.93 | 4.93 |
| 110 | 17.005 | 17.9 | 18.795 | 5 | 5 |
| 111 | 16.459 | 17.337 | 18.215 | 5.07 | 5.07 |
| 112 | 15.931 | 16.793 | 17.655 | 5.13 | 5.13 |
| 113 | 15.422 | 16.268 | 17.114 | 5.2 | 5.2 |
| 114 | 14.933 | 15.763 | 16.593 | 5.27 | 5.27 |
| 115 | 14.46 | 15.275 | 16.09 | 5.33 | 5.33 |
| 116 | 14.005 | 14.804 | 15.603 | 5.4 | 5.4 |
| 117 | 13.565 | 14.349 | 15.133 | 5.47 | 5.47 |
| 118 | 13.141 | 13.911 | 14.681 | 5.53 | 5.53 |
| 119 | 12.733 | 13.488 | 14.243 | 5.6 | 5.6 |
| 120 | 12.339 | 13.08 | 13.821 | 5.67 | 5.67 |
| 121 | 11.958 | 12.685 | 13.412 | 5.73 | 5.73 |
| 122 | 11.591 | 12.305 | 13.019 | 5.8 | 5.8 |
| 123 | 11.238 | 11.938 | 12.638 | 5.87 | 5.87 |
| 124 | 10.897 | 11.584 | 12.271 | 5.93 | 5.93 |
| 125 | 10.567 | 11.242 | 11.917 | 6 | 6 |
| 126 | 10.249 | 10.911 | 11.573 | 6.07 | 6.07 |
| 127 | 9.943 | 10.593 | 11.243 | 6.13 | 6.13 |
| 128 | 9.647 | 10.285 | 10.923 | 6.2 | 6.2 |
| 129 | 9.362 | 9.988 | 10.614 | 6.27 | 6.27 |
| 130 | 9.087 | 9.701 | 10.315 | 6.33 | 6.33 |
| 131 | 8.822 | 9.425 | 10.028 | 6.4 | 6.4 |
| 132 | 8.566 | 9.158 | 9.75 | 6.47 | 6.47 |
| 133 | 8.319 | 8.9 | 9.481 | 6.53 | 6.53 |
| 134 | 8.08 | 8.651 | 9.222 | 6.6 | 6.6 |
| 135 | 7.85 | 8.411 | 8.972 | 6.67 | 6.67 |
| 136 | 7.629 | 8.18 | 8.731 | 6.73 | 6.73 |
| 137 | 7.416 | 7.957 | 8.498 | 6.8 | 6.8 |
| 138 | 7.209 | 7.741 | 8.273 | 6.87 | 6.87 |
| 139 | 7.011 | 7.533 | 8.055 | 6.93 | 6.93 |
| 140 | 6.82 | 7.333 | 7.846 | 7 | 7 |

Haier

| R25=10kΩ±3% B25/50=3700K±3% | | | | | |
|---|---|---|---|---|---|
| Temp | Resistance (kΩ) | | | % (Resist. Tol) | |
| (°C) | Rmax | R (t) Normal | Rmin | MAX (+) | MIN (-) |
| -30 | 145.819 | 135.018 | 124.217 | 7 | 7 |
| -29 | 138.071 | 129.126 | 120.181 | 6.93 | 6.93 |
| -28 | 131.793 | 123.339 | 114.885 | 6.85 | 6.85 |
| -27 | 125.665 | 117.684 | 109.703 | 6.78 | 6.78 |
| -26 | 119.706 | 112.18 | 104.654 | 6.71 | 6.71 |
| -25 | 113.933 | 106.843 | 99.753 | 6.64 | 6.64 |
| -24 | 108.361 | 101.687 | 95.013 | 6.56 | 6.56 |
| -23 | 102.997 | 96.719 | 90.441 | 6.49 | 6.49 |
| -22 | 97.847 | 91.946 | 86.045 | 6.42 | 6.42 |
| -21 | 92.915 | 87.371 | 81.827 | 6.35 | 6.35 |
| -20 | 88.2 | 82.994 | 77.788 | 6.27 | 6.27 |
| -19 | 83.702 | 78.815 | 73.928 | 6.2 | 6.2 |
| -18 | 79.417 | 74.832 | 70.247 | 6.13 | 6.13 |
| -17 | 75.342 | 71.041 | 66.74 | 6.05 | 6.05 |
| -16 | 71.471 | 67.437 | 63.403 | 5.98 | 5.98 |
| -15 | 67.798 | 64.015 | 60.232 | 5.91 | 5.91 |
| -14 | 64.316 | 60.769 | 57.222 | 5.84 | 5.84 |
| -13 | 61.017 | 57.692 | 54.367 | 5.76 | 5.76 |
| -12 | 57.895 | 54.778 | 51.661 | 5.69 | 5.69 |
| -11 | 54.942 | 52.019 | 49.096 | 5.62 | 5.62 |
| -10 | 52.149 | 49.409 | 46.669 | 5.55 | 5.55 |
| -9 | 49.51 | 46.941 | 44.372 | 5.47 | 5.47 |
| -8 | 47.016 | 44.607 | 42.198 | 5.4 | 5.4 |
| -7 | 44.659 | 42.4 | 40.141 | 5.33 | 5.33 |
| -6 | 42.433 | 40.315 | 38.197 | 5.25 | 5.25 |
| -5 | 40.332 | 38.345 | 36.358 | 5.18 | 5.18 |
| -4 | 38.346 | 36.482 | 34.618 | 5.11 | 5.11 |
| -3 | 36.472 | 34.723 | 32.974 | 5.04 | 5.04 |
| -2 | 34.7 | 33.059 | 31.418 | 4.96 | 4.96 |
| -1 | 33.027 | 31.487 | 29.947 | 4.89 | 4.89 |
| 0 | 31.445 | 30 | 28.555 | 4.82 | 4.82 |
| 1 | 29.951 | 28.594 | 27.237 | 4.75 | 4.75 |
| 2 | 28.538 | 27.264 | 25.99 | 4.67 | 4.67 |
| 3 | 27.202 | 26.006 | 24.81 | 4.6 | 4.6 |
| 4 | 25.938 | 24.815 | 23.692 | 4.53 | 4.53 |

| R25=10kΩ±3% B25/50=3700K±3% | | | | | |
|---|---|---|---|---|---|
| Temp | Resistance (kΩ) | | | % (Resist. Tol) | |
| (°C) | Rmax | R (t) Normal | Rmin | MAX (+) | MIN (-) |
| 5 | 24.742 | 23.687 | 22.632 | 4.45 | 4.45 |
| 6 | 23.61 | 22.619 | 21.628 | 4.38 | 4.38 |
| 7 | 22.538 | 21.607 | 20.676 | 4.31 | 4.31 |
| 8 | 21.522 | 20.647 | 19.772 | 4.24 | 4.24 |
| 9 | 20.559 | 19.737 | 18.915 | 4.16 | 4.16 |
| 10 | 19.646 | 18.874 | 18.102 | 4.09 | 4.09 |
| 11 | 18.779 | 18.054 | 17.329 | 4.02 | 4.02 |
| 12 | 17.958 | 17.276 | 16.594 | 3.95 | 3.95 |
| 13 | 17.177 | 16.537 | 15.897 | 3.87 | 3.87 |
| 14 | 16.436 | 15.834 | 15.232 | 3.8 | 3.8 |
| 15 | 15.731 | 15.166 | 14.601 | 3.73 | 3.73 |
| 16 | 15.061 | 14.53 | 13.999 | 3.65 | 3.65 |
| 17 | 14.424 | 13.925 | 13.426 | 3.58 | 3.58 |
| 18 | 13.817 | 13.349 | 12.881 | 3.51 | 3.51 |
| 19 | 13.24 | 12.8 | 12.36 | 3.44 | 3.44 |
| 20 | 12.69 | 12.277 | 11.864 | 3.36 | 3.36 |
| 21 | 12.166 | 11.778 | 11.39 | 3.29 | 3.29 |
| 22 | 11.666 | 11.302 | 10.938 | 3.22 | 3.22 |
| 23 | 11.189 | 10.848 | 10.507 | 3.15 | 3.15 |
| 24 | 10.734 | 10.414 | 10.094 | 3.07 | 3.07 |
| 25 | 10.3 | 10 | 9.7 | 3 | 3 |
| 26 | 9.898 | 9.604 | 9.31 | 3.06 | 3.06 |
| 27 | 9.514 | 9.226 | 8.938 | 3.13 | 3.13 |
| 28 | 9.147 | 8.864 | 8.581 | 3.19 | 3.19 |
| 29 | 8.796 | 8.519 | 8.242 | 3.25 | 3.25 |
| 30 | 8.459 | 8.188 | 7.917 | 3.31 | 3.31 |
| 31 | 8.137 | 7.871 | 7.605 | 3.38 | 3.38 |
| 32 | 7.828 | 7.568 | 7.308 | 3.44 | 3.44 |
| 33 | 7.532 | 7.277 | 7.022 | 3.5 | 3.5 |
| 34 | 7.248 | 6.999 | 6.75 | 3.56 | 3.56 |
| 35 | 6.977 | 6.733 | 6.489 | 3.63 | 3.63 |
| 36 | 6.716 | 6.477 | 6.238 | 3.69 | 3.69 |
| 37 | 6.466 | 6.232 | 5.998 | 3.75 | 3.75 |
| 38 | 6.227 | 5.998 | 5.769 | 3.81 | 3.81 |
| 39 | 5.997 | 5.773 | 5.549 | 3.88 | 3.88 |
| 40 | 5.776 | 5.557 | 5.338 | 3.94 | 3.94 |
| 41 | 5.564 | 5.35 | 5.136 | 4 | 4 |

Haier

| R25=10kΩ±3% B25/50=3700K±3% | | | | | |
|---|---|---|---|---|---|
| Temp | Resistance (kΩ) | | | % (Resist. Tol) | |
| (°C) | Rmax | R (t) Normal | Rmin | MAX (+) | MIN (-) |
| 42 | 5.36 | 5.151 | 4.942 | 4.06 | 4.06 |
| 43 | 5.166 | 4.961 | 4.756 | 4.13 | 4.13 |
| 44 | 4.978 | 4.778 | 4.578 | 4.19 | 4.19 |
| 45 | 4.799 | 4.603 | 4.407 | 4.25 | 4.25 |
| 46 | 4.625 | 4.434 | 4.243 | 4.31 | 4.31 |
| 47 | 4.46 | 4.273 | 4.086 | 4.38 | 4.38 |
| 48 | 4.301 | 4.118 | 3.935 | 4.44 | 4.44 |
| 49 | 4.148 | 3.969 | 3.79 | 4.5 | 4.5 |
| 50 | 4.001 | 3.826 | 3.651 | 4.56 | 4.56 |
| 51 | 3.86 | 3.689 | 3.518 | 4.63 | 4.63 |
| 52 | 3.724 | 3.557 | 3.39 | 4.69 | 4.69 |
| 53 | 3.594 | 3.431 | 3.268 | 4.75 | 4.75 |
| 54 | 3.468 | 3.309 | 3.15 | 4.81 | 4.81 |
| 55 | 3.349 | 3.193 | 3.037 | 4.88 | 4.88 |
| 56 | 3.233 | 3.081 | 2.929 | 4.94 | 4.94 |
| 57 | 3.123 | 2.974 | 2.825 | 5 | 5 |
| 58 | 3.015 | 2.87 | 2.725 | 5.06 | 5.06 |
| 59 | 2.913 | 2.771 | 2.629 | 5.13 | 5.13 |
| 60 | 2.815 | 2.676 | 2.537 | 5.19 | 5.19 |
| 61 | 2.721 | 2.585 | 2.449 | 5.25 | 5.25 |
| 62 | 2.63 | 2.497 | 2.364 | 5.31 | 5.31 |
| 63 | 2.543 | 2.413 | 2.283 | 5.38 | 5.38 |
| 64 | 2.459 | 2.332 | 2.205 | 5.44 | 5.44 |
| 65 | 2.379 | 2.255 | 2.131 | 5.5 | 5.5 |
| 66 | 2.301 | 2.18 | 2.059 | 5.56 | 5.56 |
| 67 | 2.228 | 2.109 | 1.99 | 5.63 | 5.63 |
| 68 | 2.156 | 2.04 | 1.924 | 5.69 | 5.69 |
| 69 | 2.088 | 1.974 | 1.86 | 5.75 | 5.75 |
| 70 | 2.021 | 1.91 | 1.799 | 5.81 | 5.81 |
| 71 | 1.958 | 1.849 | 1.74 | 5.88 | 5.88 |
| 72 | 1.897 | 1.791 | 1.685 | 5.94 | 5.94 |
| 73 | 1.839 | 1.735 | 1.631 | 6 | 6 |
| 74 | 1.782 | 1.68 | 1.578 | 6.06 | 6.06 |
| 75 | 1.728 | 1.628 | 1.528 | 6.13 | 6.13 |

| R25=10kΩ±3% B25/50=3700K±3% | | | | | |
|---|---|---|---|---|---|
| Temp | Resistance (kΩ) | | | % (Resist. Tol) | |
| (°C) | Rmax | R (t) Normal | Rmin | MAX (+) | MIN (-) |
| 76 | 1.676 | 1.578 | 1.48 | 6.19 | 6.19 |
| 77 | 1.626 | 1.53 | 1.434 | 6.25 | 6.25 |
| 78 | 1.578 | 1.484 | 1.39 | 6.31 | 6.31 |
| 79 | 1.531 | 1.439 | 1.347 | 6.38 | 6.38 |
| 80 | 1.486 | 1.396 | 1.306 | 6.44 | 6.44 |
| 81 | 1.443 | 1.355 | 1.267 | 6.5 | 6.5 |
| 82 | 1.401 | 1.315 | 1.229 | 6.56 | 6.56 |
| 83 | 1.362 | 1.277 | 1.192 | 6.63 | 6.63 |
| 84 | 1.323 | 1.24 | 1.157 | 6.69 | 6.69 |
| 85 | 1.285 | 1.204 | 1.123 | 6.75 | 6.75 |
| 86 | 1.249 | 1.169 | 1.089 | 6.81 | 6.81 |
| 87 | 1.214 | 1.136 | 1.058 | 6.88 | 6.88 |
| 88 | 1.181 | 1.104 | 1.027 | 6.94 | 6.94 |
| 89 | 1.148 | 1.073 | 0.998 | 7 | 7 |
| 90 | 1.116 | 1.042 | 0.968 | 7.06 | 7.06 |
| 91 | 1.085 | 1.013 | 0.941 | 7.13 | 7.13 |
| 92 | 1.056 | 0.985 | 0.914 | 7.19 | 7.19 |
| 93 | 1.026 | 0.957 | 0.888 | 7.25 | 7.25 |
| 94 | 0.998 | 0.93 | 0.862 | 7.31 | 7.31 |
| 95 | 0.971 | 0.904 | 0.837 | 7.38 | 7.38 |
| 96 | 0.944 | 0.879 | 0.814 | 7.44 | 7.44 |
| 97 | 0.918 | 0.854 | 0.79 | 7.5 | 7.5 |
| 98 | 0.893 | 0.83 | 0.767 | 7.56 | 7.56 |
| 99 | 0.867 | 0.806 | 0.745 | 7.63 | 7.63 |
| 100 | 0.843 | 0.783 | 0.723 | 7.69 | 7.69 |
| 101 | 0.819 | 0.76 | 0.701 | 7.75 | 7.75 |
| 102 | 0.796 | 0.738 | 0.68 | 7.81 | 7.81 |
| 103 | 0.772 | 0.716 | 0.66 | 7.88 | 7.88 |
| 104 | 0.749 | 0.694 | 0.639 | 7.94 | 7.94 |
| 105 | 0.727 | 0.673 | 0.619 | 8 | 8 |

Haier

# Haier Commercial Air Condition

ADDRESS: No.1 Haier Road, Hi-tech Zone,Qingdao 266101 P.R.China

Web: Http://www.haier.com

Haier reserves the right to make change without any notice.